e-chains®

igus.eu ... catalogue of energy supply systems for the robot industry

robotics

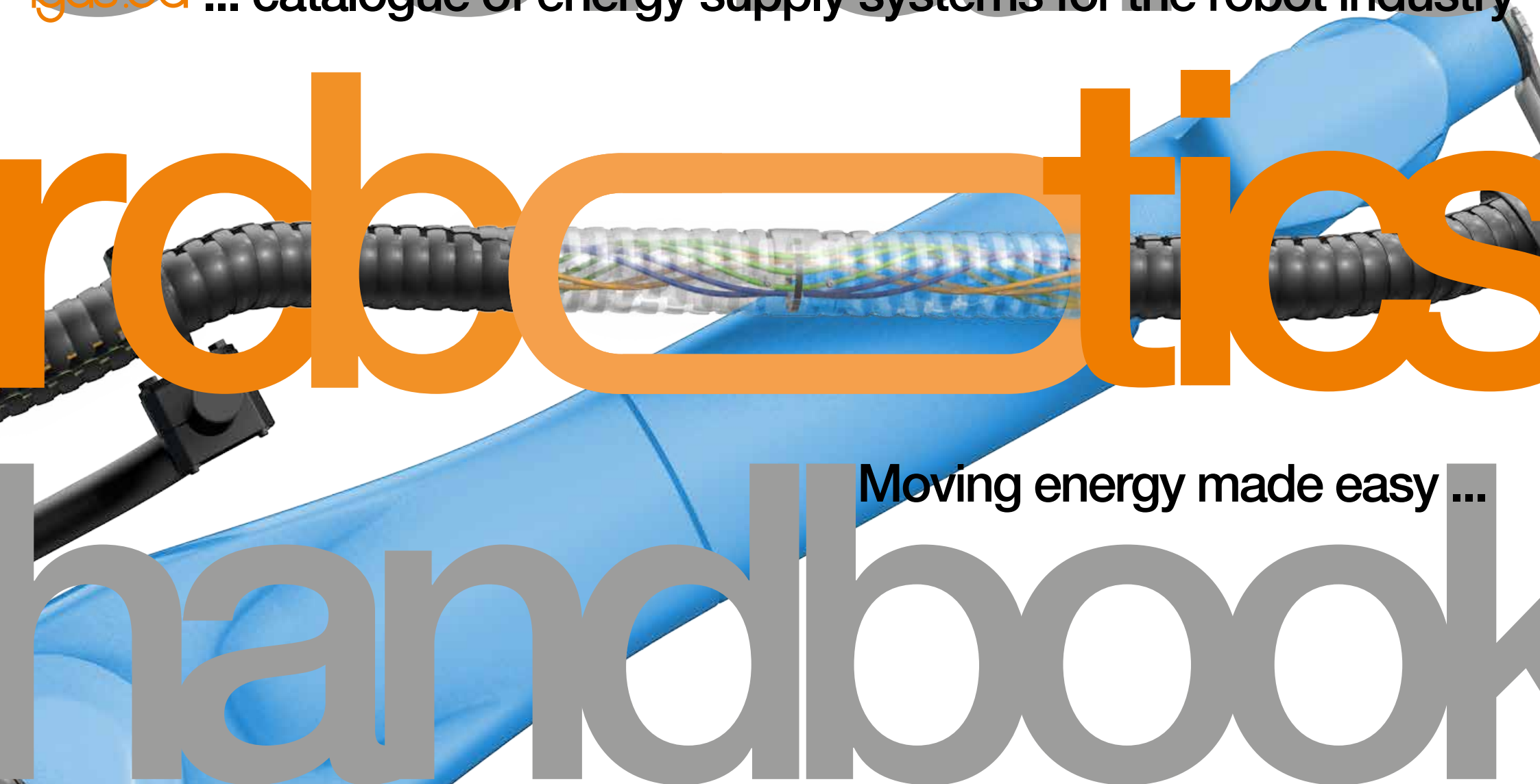

Moving energy made easy ...

handbook

igus® solutions for the robot industry

Quickly find the right solution for your application

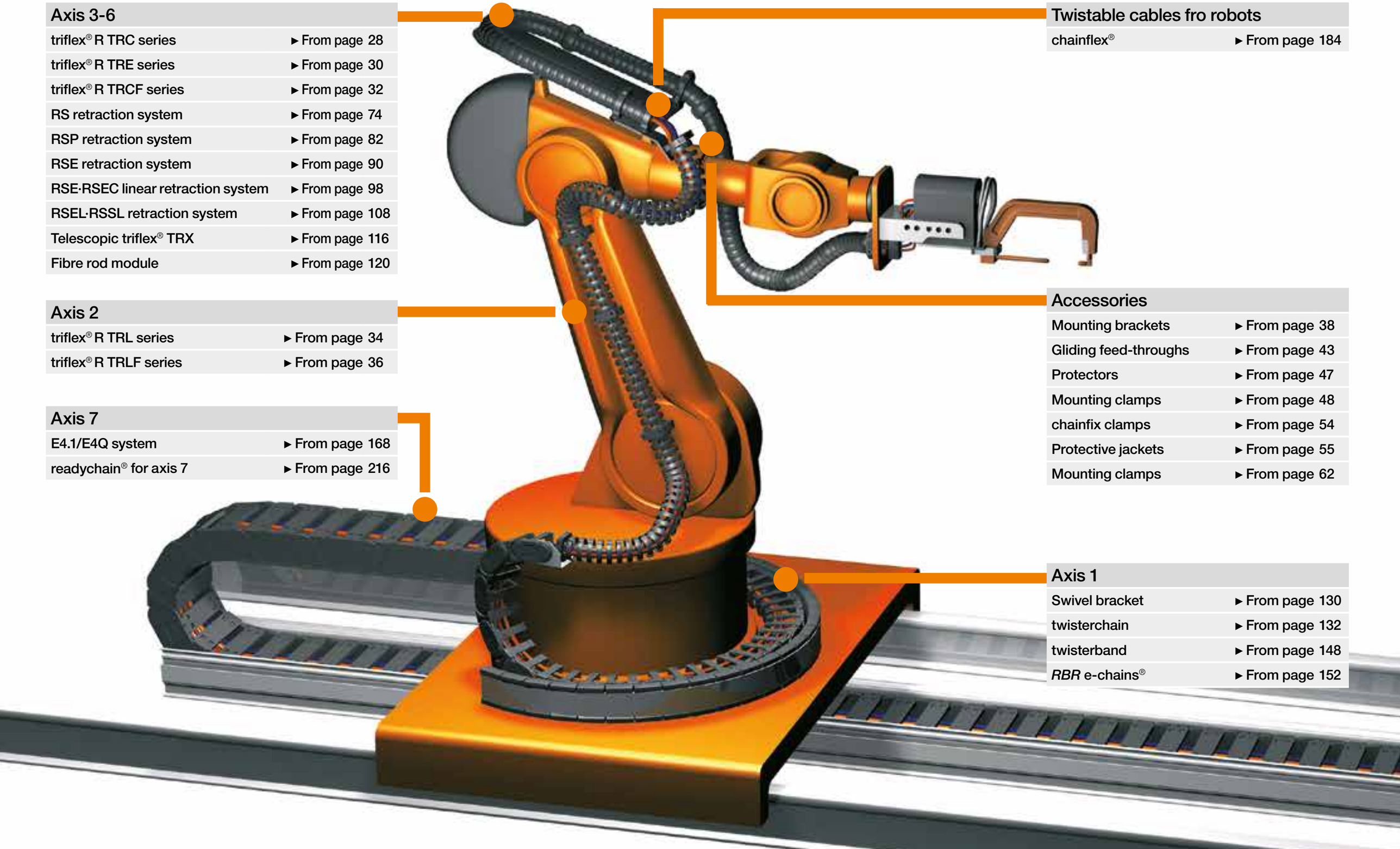

Axis 3-6

triflex® R TRC series	▸ From page 28
triflex® R TRE series	▸ From page 30
triflex® R TRCF series	▸ From page 32
RS retraction system	▸ From page 74
RSP retraction system	▸ From page 82
RSE retraction system	▸ From page 90
RSE·RSEC linear retraction system	▸ From page 98
RSEL·RSSL retraction system	▸ From page 108
Telescopic triflex® TRX	▸ From page 116
Fibre rod module	▸ From page 120

Axis 2

triflex® R TRL series	▸ From page 34
triflex® R TRLF series	▸ From page 36

Axis 7

E4.1/E4Q system	▸ From page 168
readychain® for axis 7	▸ From page 216

Twistable cables fro robots

chainflex®	▸ From page 184

Accessories

Mounting brackets	▸ From page 38
Gliding feed-throughs	▸ From page 43
Protectors	▸ From page 47
Mounting clamps	▸ From page 48
chainfix clamps	▸ From page 54
Protective jackets	▸ From page 55
Mounting clamps	▸ From page 62

Axis 1

Swivel bracket	▸ From page 130
twisterchain	▸ From page 132
twisterband	▸ From page 148
RBR e-chains®	▸ From page 152

QuickRobot

The complete online equipment tool for robots

Energy supply for robots made easy online: around 1.5 million configuration options for energy supply components on a robot

Thanks to this selection tool for robot equipment, a complete system including cable guide systems can be specified from the available robot types. One can select either a full system or a system for an individual axis.

- Choose your robot from a multitude of models supplied by well-known manufacturers
- Provides a full parts list, total price and expected delivery time for your configuration
- Easy transfer to shopping cart, complete configuration or individual parts, no minimum order quantity
- Save, download or reset your individual configuration
- Creation of PDF report for your configuration
- Also suitable for iPad

More information ▶ www.igus.eu/quickrobot

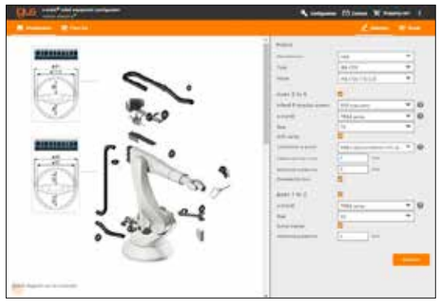

For more information about the QuickRobot complete online equipment tool and example configurations, see ▶ Page 16

Selection table

Tech up. Cost down.	▶ Page 2
Robot equipment configurator, QuickRobot	▶ Page 14
QuickRobot, example configurations	▶ Page 16
triflex® R application examples	▶ Page 18
3D e-chains® for robots and multi-axis movements	▶ Page 20
triflex® R TRC series	▶ Page 28
triflex® R TRE series	▶ Page 30
triflex® R TRCF series	▶ Page 32
triflex® R TRL series	▶ Page 34
triflex® R TRLF series	▶ Page 36
triflex® R accessories	
Standard mounting brackets	▶ Page 38
Light mounting brackets	▶ Page 40
Mounting brackets, radius support	▶ Page 42
Gliding feed-throughs	▶ Page 43
Swivelling mounting brackets	▶ Page 44
Swivel bearing gliding feed-throughs	▶ Page 46
Protectors	▶ Page 47
Compact connections for clamp axis 6	▶ Page 48
Heavy duty connections, clamps axis 6, radius support	▶ Page 51
Quick exchange kit for clamp axis 6	▶ Page 52
Heavy duty connections for axis 6, radius support	▶ Page 53
chainfix clamps	▶ Page 54
Protective jackets	▶ Page 55
Cobot universal mounting brackets	▶ Page 56
Cobot cable clip	▶ Page 60
Fibre-rod bracket for Universal Robots	▶ Page 61
UR metal mounting brackets	▶ Page 62
Mounting brackets for KUKA LBR iiwa	▶ Page 64
Cobot mounting brackets	▶ Page 66
SCARA Cable Solution (SCS)	▶ Page 68
triflex® R retraction systems	▶ Page 70
RS retraction system	▶ Page 74
RSP retraction system	▶ Page 82
RSE retraction system	▶ Page 90
RSE·RSEC linear	▶ Page 98
RSEL·RSSL retraction system	▶ Page 108
triflex® R more accessories	
Telescopic triflex® TRX	▶ Page 116
Fibre-rod module and universal mounting kits	▶ Page 120
Adjustment unit for retraction systems	▶ Page 122
Adapter consoles for retraction systems	▶ Page 123
Clamps, attachment to axis 6	▶ Page 126
e-chains® solutions for axis 1	▶ Page 128
Swivel bracket - for axis 1	▶ Page 130
twisterchain	▶ Page 132
twisterband	▶ Page 148
Rotating energy supplies, ***RBR***	▶ Page 152
easy triflex®	▶ Page 156
triflex®	▶ Page 162
e-chains® and e-tubes for safe energy supply on the robot 7th axis	▶ Page 168
E4.1 system	▶ Page 170
E4Q system	▶ Page 174
e-spool® flex 2.0	▶ Page 180
Twistable chainflex® cables for robots and 3D applications	▶ Page 184
Control cable, CF77.UL.D	▶ Page 190
Control cable, CFROBOT2	▶ Page 194
Data cable, CFROBOT3	▶ Page 196
Measuring system cable, CFROBOT4	▶ Page 198
Fibre Optic Cable, CFROBOT5	▶ Page 202
Motor cable, CFROBOT6	▶ Page 204
Motor cable, CFROBOT7	▶ Page 206
Spindle cable/Single core CFROBOT	▶ Page 210
Bus cable, CFROBOT8	▶ Page 212
Bus cable, CFROBOT8.PLUS	▶ Page 216
Hybrid cable, CFROBOT9	▶ Page 220
Robotics, harnessed dress packs and cables for robots	▶ Page 224
readychain® robot, ready to install harnessed e-chain systems® for robots	▶ Page 226
triflex® readychain® dress packs for welding robots	▶ Page 227
Harnessed cables - KUKA Quantec	▶ Page 228
Direct connection cable - KUKA Quantec	▶ Page 229
Harnessed cables - KUKA Fortec	▶ Page 230
Direct connection cable - KUKA Fortec	▶ Page 231
Harnessed cables - KUKA Titan	▶ Page 232
Harnessed cables - Fanuc M-900iB	▶ Page 234
Direct connection cable - Fanuc M-900iB	▶ Page 235
Harnessed cables - Fanuc R-2000iC	▶ Page 236
Direct connection cable - Fanuc R-2000iC	▶ Page 237
Harnessed cables - ABB IRB 6620, IRB 6640, IRB 6650S, IRB 7600	▶ Page 238
Direct connection cable - ABB IRB 6620, IRB 6640, IRB 6650S, IRB 7600	▶ Page 239
Harnessed cables - ABB IRB 6700	▶ Page 240
Direct connection cable - ABB IRB 6700	▶ Page 241
Harnessed cables - ABB IRB 8700	▶ Page 242
Direct connection cable - ABB IRB 8700	▶ Page 243
Cables according to AIDA specifications	▶ Page 244
Other contents	
igus® readychain®, ready-to-install harnessed e-chain systems® for robots	▶ Page 216
igus® locations	▶ Page 198

motion? plastics!
Tech up, Cost down ...
... and always at least one of these: that is the goal of all igus® products. Other benefits are the fast delivery time, from 24hrs until shipping, plus the service life calculation for nearly all product lines. We will be happy to send you free sample parts for your testing and prototypes. Tested and proven service life. Available immediately with online service life calculation.

Available from stock. Ready to ship in 24 - 48hrs.
The delivery times indicated are the average time until the ordered goods are dispatched.

No minimum order value. No surcharges.
No minimum order value with igus®.
Just order the amount you need.

Chain - Cable - Guarantee
Beyond the legal warranty we also vouch for wear and tear. With guarantee certificate

"7 to 8 plus Saturday" service
Monday to Friday 7.00am to 8.00pm
Saturday from 8.00am to 12.00pm.

Order hotline
Phone +49-2203 9649-800
Fax +49-2203 9649-222

Order around-the-clock - www.igus.eu/triflexR
Discover 100,000 products in our online shop and order around-the-clock!

Calculate and configure online
Download 3D CAD models free of charge and quickly find the product you are looking for with our product finders and intelligent filters.

igus® LiveChat
There are many ways to reach us, including our online live chat.

Do you have any questions?
If you have any questions, simply call us or use our online tools at ► www.igus.eu

fast!

Multi-axis energy chains for robots

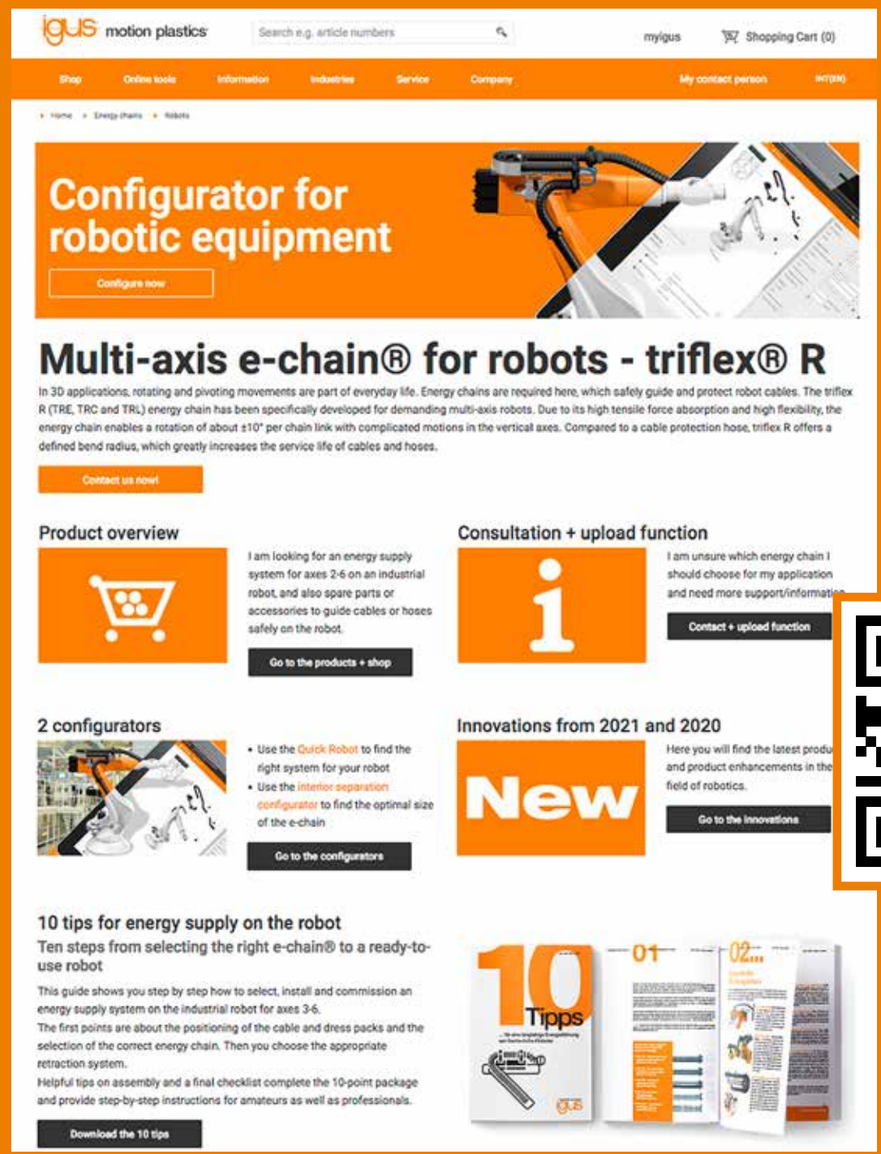

Tech up.
Cost down.

Dear customer,

The modular igus® robot equipment kit comprises well over 10,000 different items. We can offer you an optimised solution for almost every robot. With a wide variety of accessories, the triflex® R energy chain system can be adapted to many applications and the most varied movements of your robot.

Our online "robot equipment configurator" enables you to create the right configuration according to your specifications in just a few seconds. The configurator gives you a visual representation of the products on the robot and a parts list - try it for yourself ► **www.igus.de/quickrobot**.

All igus® robotic components are tested in our laboratory and have already been used reliably in many applications for many years. Our goal is to ensure that the whole energy supply on your robots is reliable. We do not simply focus on mechanical protection but instead look at the entire application including the cables that have also been especially developed for use on the robot. We will gladly find a solution for your application and look forward to receiving your enquiry. We are always happy to visit you on site and show you the advantages of the modular igus® robot equipment kit. Please contact us.

Matthias Meyer
Head of Business Unit ECS triflex® & Robotics
Phone +49-2203 9649-161
mmeyer@igus.net

Test before you invest ...
Free triflex® R sample boxes - filled with information and samples specific to the robotics industry
Part No. MAT0073450.20

► **www.igus.eu/robot**

Tested.

We operate the largest test laboratory in the industry for you - 10 billion test cycles per year in the laboratory for energy chains and chainflex® cables (as of 04/2022)

Are e-chains® correct for your application? You don't need to guess. Instead, we operate the largest test laboratory in the industry on an area of 3,800 square metres. We test energy chain systems there under the realistic conditions. 180 test stations perform over ten billion test cycles with e-chains® and chainflex® cables every year.

We use the results to develop the optimum energy supply system for any application and to make reliable statements about service life. Regardless of whether your application is in the dusty desert or freezing cold. For this reason, we also offer you an above-average guarantee of up to 36 months - as the only supplier worldwide to do so (as of 04/2022).

IPA-certified in-house cleanroom laboratory


Cable test, more than 80 million strokes


Bend factor test, 76 million strokes at 9.4 x d


Outdoor test facility for travel lengths of up to 400m


Swarf test, 100% swarf-resistant


Test for torsion and twisting


3,800m² igus® lab.It is the largest test lab in the energy chain industry with 65 e-chain® test machines and about 7,515 test results per year

► www.igus.eu/testlab

Guaranteed.

Up to 36 months e-chain® guarantee* - use the service life calculator to determine the guaranteed service life and receive your individual guarantee certificate online

The service life of e-chains® often exceeds 10 years. The new guarantee service gives customers the confidence of being able to design their individual application right and always choose the most cost-effective e-chain® that works reliably.

- Up to 36 months guarantee* on all e-chain® components that have failed due to wear and tear
- Generate individual guarantee certificate via the igus® e-chain® service life calculator and have it sent by e-mail
- Free replacement parts for e-chains® that fail due to wear and tear
- The chainflex® cables used in the e-chain® also come with up to 36 months guarantee

▶ Quickly harnessed ...

▶ ... quickly delivered ...

▶ ... with an up to 36-month guarantee*!

Guarantee information*
The igus® e-chain® guarantee of up to 36 months applies to the number of double strokes according to the online service life calculator (www.igus.eu/info/energy-chains-service-life-calculator). The guarantee conditions available at ▶ www.igus.eu/e-chain-guarantee apply.

The igus® chainflex® guarantee of up to 36 months is valid for the number of double strokes calculated according to the online service life calculator (www.igus.eu/ChainflexTools/ServiceLifeCalculator). The guarantee conditions available at ▶ www.igus.eu/guarantee apply.

Guarantee igus e-chain 36 up to 36 months guarantee

Guarantee igus chainflex 36 up to 36 months guarantee

▶ www.igus.eu/ECS-service-life

Recycling.

Let's protect the environment together! We can recycle old energy chains, irrespective of their manufacturer

CO_2 emissions in the industry are driving climate change. Industry must take responsibility to counteract this development. We have therefore launched the **chainge** recycling program.

Send us your old energy chains instead of simply disposing of them with industrial waste. We will separate the material into its constituent materials and shred it. We use the granulate of igus® energy chains for moulding new products. We turn the recycled material from competitors' chains over to circular economy exchanges. Of course, the program is also rewarding for you. We compensate your commitment with a voucher for new igus® products.

1. Clean

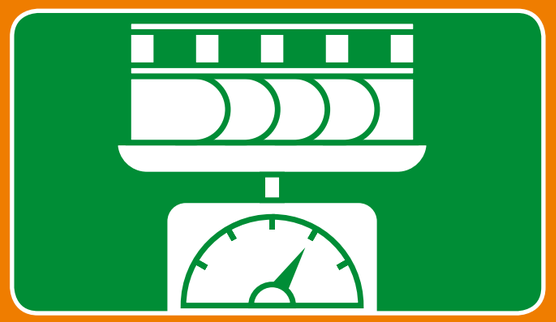

2. Weigh

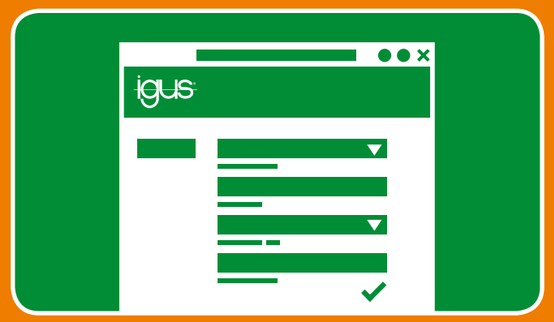

3. Fill out the form

4. Pack

5. You will receive a voucher that you can then use for new igus® products

Our environmental management is certified according to DQS ISO 14001:2015

the chainge
the igus' green chainge recycling program

► www.igus.eu/chainge

Fast delivery.

Our supply chain pushes the accelerator for you
We guarantee fast delivery worldwide - with 4,600 employees in Germany and at 30 international subsidiaries as well as offices and support points in more than 80 countries. 97% of the catalogue parts are immediately available. Your order will be ready to ship within 24-48 hours - even sooner if you wish. You can conveniently track the shipment online.

And best of all: there are no surcharges for small quantities, no cutting charges for cables and no packaging costs.

Shipped from 24hrs

No minimum order quantity

7-20 plus Saturday service

Online order tracking

► www.igus.eu/24hrs

24hrs

Single components e.g.

A single e-chain® link, 6m of e-chain®, 3 strain relief elements, etc.

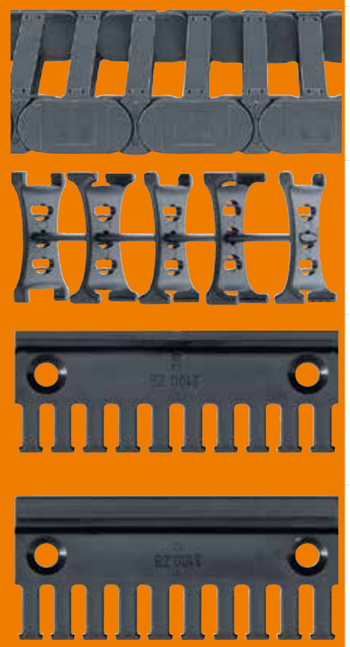

24-72hrs

Customised e-chain systems® e.g.

11.46m of igus® e-chains® with interior separators, mounting brackets and strain relief elements according to your specifications. Also with loose accessories as chainflex® cables, guide troughs, mounting brackets, strain relief and installation materials

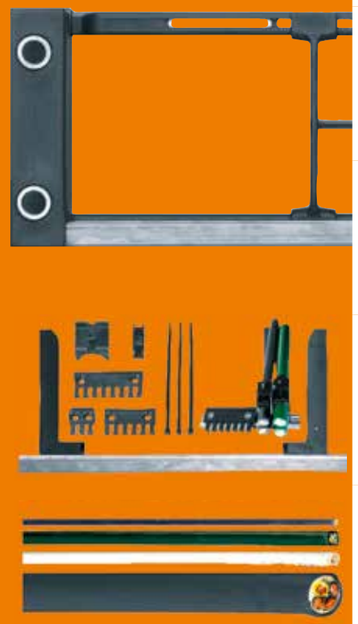

3-5 business days

Harnessed systems, e.g. readychain® basic

Simple, harnessed e-chain systems® including installed cables without connectors, labelled and tail lengths to your specifications

10 business days

readychain® premium

Fully harnessed igus® e-chain system® with cables of all types as well as plug connections, connectors, projections and components according to your specifications

Quality.

The igus® factory - investment in better technology and faster delivery times
A few decades ago, it was unthinkable to replace metal with plastic in the production of energy chains. But that is precisely the secret of our success. We have pushed the boundaries of plastic technology a lot further. And at the same time, costs are being reduced all the time. 200,000 customers worldwide trust **"motion plastics"**. We will continue on our growth trend and, with all innovations and investments, we will focus more than ever on sophisticated yet simple solutions.

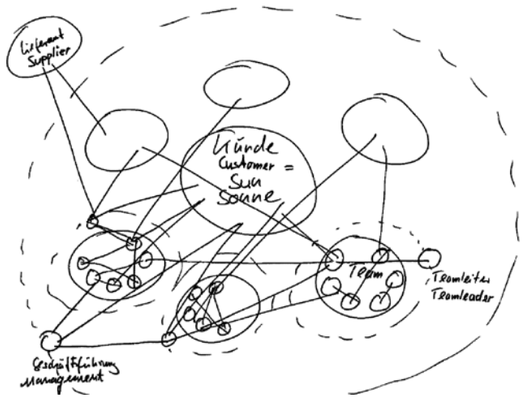

"For us, customers have the same significance as the sun to life on earth. The sun gives light, warmth and energy; our customers give us ideas, work and money."

▶ www.igus.eu/quality


Material preparation


Injection moulding


Warehouse


Assembly factory


Toolmaking


Open offices

QuickRobot.

Robot equipment configurator
Online tool for robot accessories from igus®

The QuickRobot robot equipment configurator from igus® contains around 1.5 million configuration options for around 500 robot models. Find the right parts in seconds by entering just the robot manufacturer and model. The required e-chain® size can be selected by diameter.

- Choose your robot from a multitude of models supplied by well-known manufacturers
- Provides a full parts list, total price and expected delivery time for your configuration
- Easy transfer to shopping cart, complete configuration or individual parts, no minimum order quantity
- Save, download or reset your individual configuration
- Creation of PDF report for your configuration

▶ www.igus.eu/quickrobot

Energy supply for robots made easy online: around 1.5 million configuration options for energy supply components on a robot - configure online in just 5 steps with QuickRobot

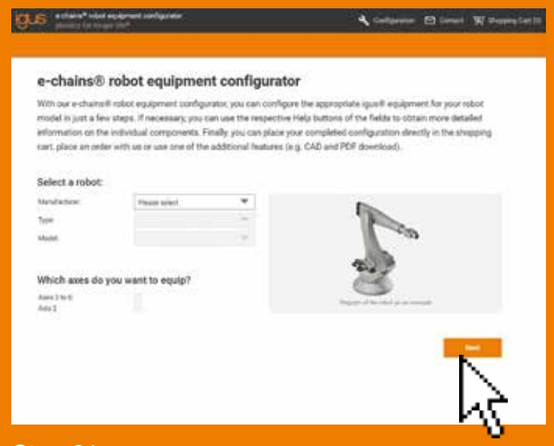

Step 01
The start page ▶ www.igus.eu/quickrobot ...

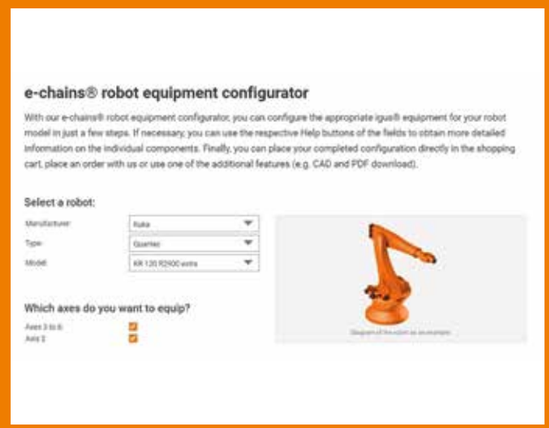

Step 02
select robot manufacturer and model ...

Step 03
select retraction system ...

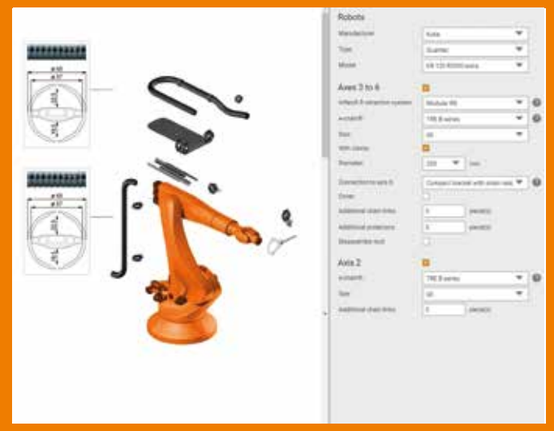

Step 04
chose parts and options ...

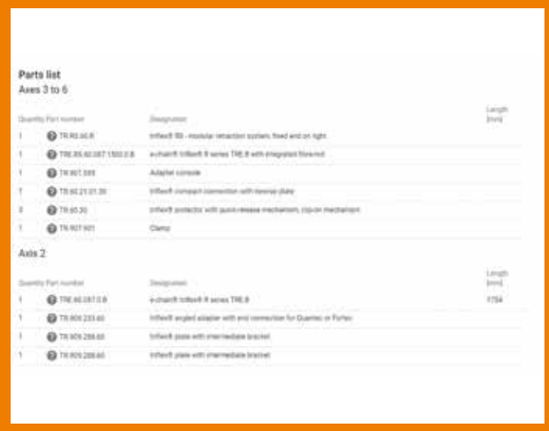

Step 05
parts list displayed

Configure.

Easy-to-use online configuration tool
All igus® robotic components are tested in our laboratory and have already been used reliably in many applications for many years. Our goal is to ensure that the whole energy supply on your robots is reliable. We do not simply focus on mechanical protection but instead look at the entire application including the cables that have also been especially developed for use on the robot. We will gladly find a solution for your application and look forward to receiving your enquiry.
We are always happy to visit you on site and show you the advantages of the modular igus® robot equipment kit.

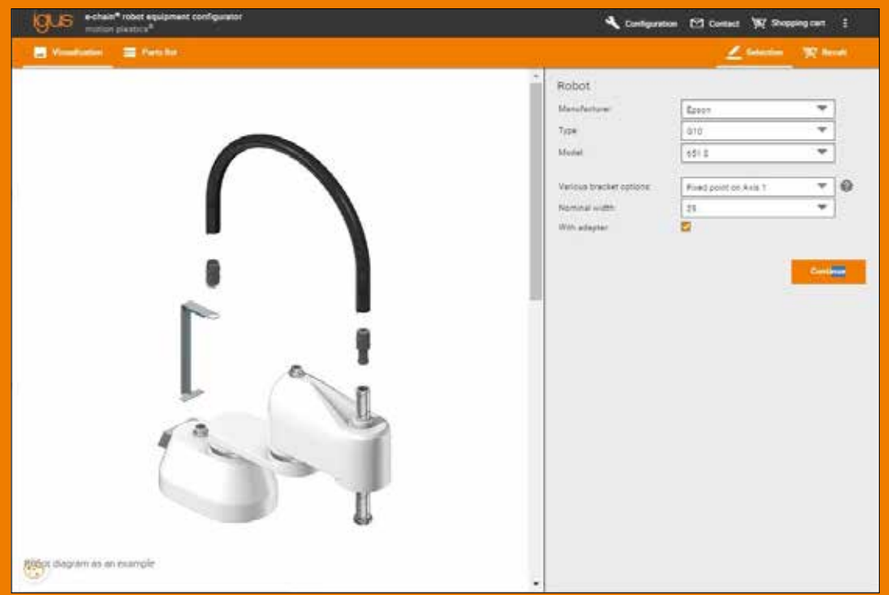

Example configuration: Epson G6-651S with SCARA Cable Solution, reinforced corrugated tube and adapter.

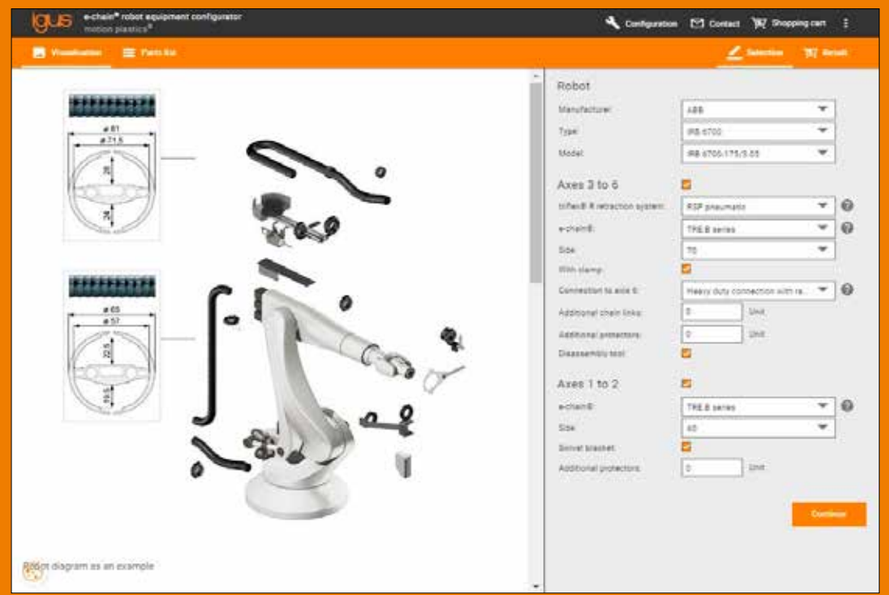

Example configuration: Energy supply axis 1-6 on ABB IRB 6700-175/3.05 with pneumatic retraction system on axis 3, swivel bracket on axis 1 and all necessary components.

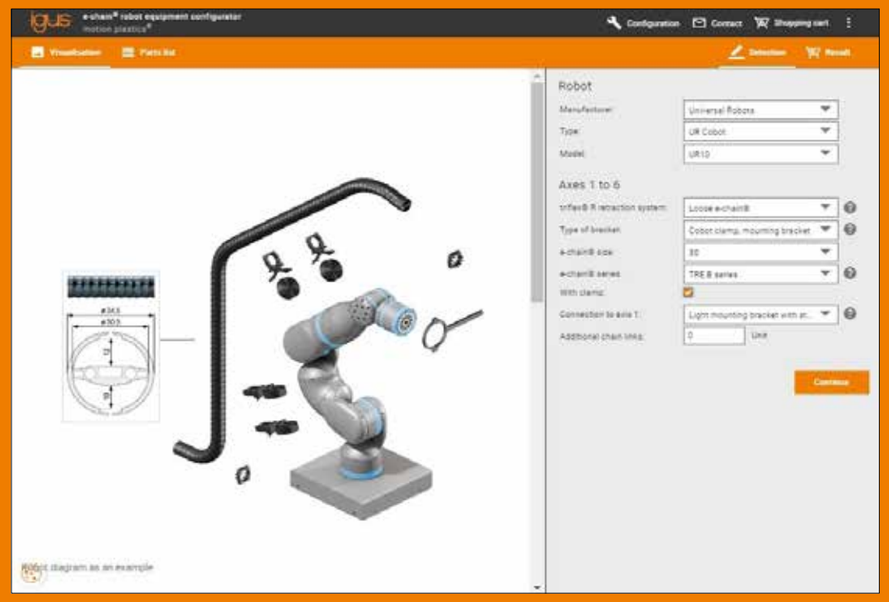

Example configuration: Energy supply axis 1-6 on UR10 with hook-and-loop strip, brackets, clamps and triflex® R TRE.B e-chain®.

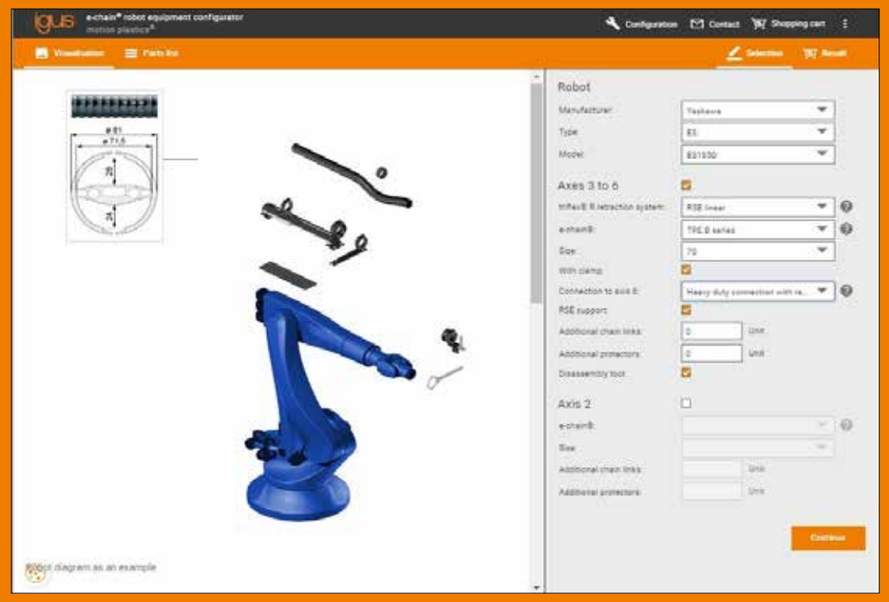

Example configuration: Yaskawa ES165D with RSE linear retraction system, mounting adapter, bracket and connection to axis 6 .

► www.igus.eu/quickrobot

Applications.

triflex® R for robot applications
triflex® R (R for "round") is the third generation of multi-axis igus® energy chains. The multi-axis energy supply system triflex® R was specially developed for sophisticated 6-axis robotic applications in harsh industrial environments. Some of the important design features are: fibre-rod option for the partial reinforcement of the triflex® R, approximately +/- 10° torsion per link, high tensile strength through ball and socket joint. More than 100 components are available in the triflex® R product range, covering all requirements from large welding robots down to small palletising robots. triflex® R has received the iF Design award.

Typical industries and applications:
- The first choice for multi-axis robots
- Machine tools
- Handling machines - 6-axis
- Material handling
- General mechanical engineering
- And much more


Closely routed on the robot arm without looping


For tough, dirty applications


triflex® R in storage and retrieval system


triflex® TRL - easy and quick cable removal


triflex® R on axis 1-6, E4.1 on axis 7 of the robot


triflex® R on a robot arm


Production plant of plastic vehicle tanks. The igus® RSP systems prevent loop formation of the e-chains® in the working area.

▶ www.igus.eu/robotics-applications

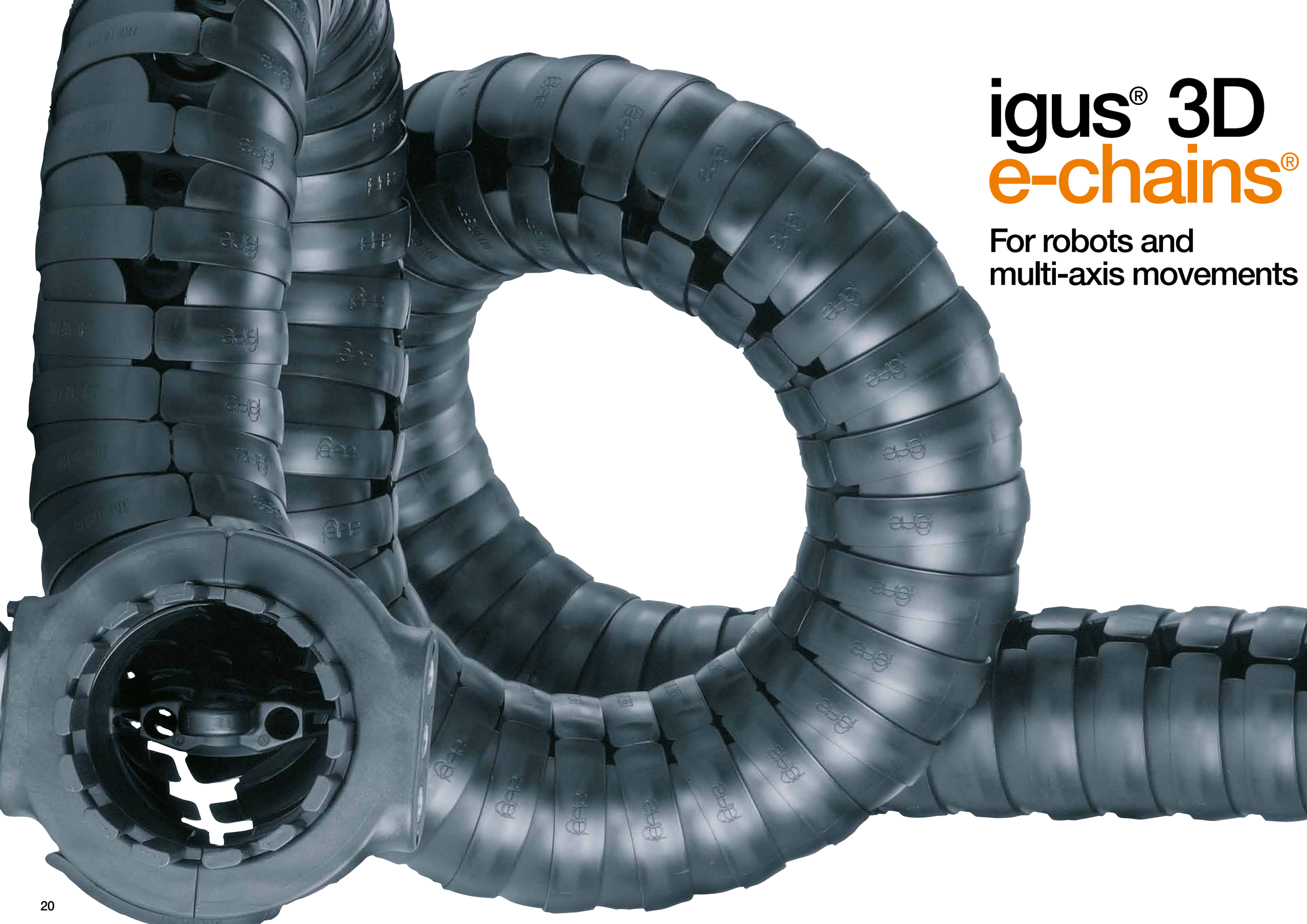

igus® 3D e-chains®

For robots and multi-axis movements

triflex® R

Key benefits for the robot industry

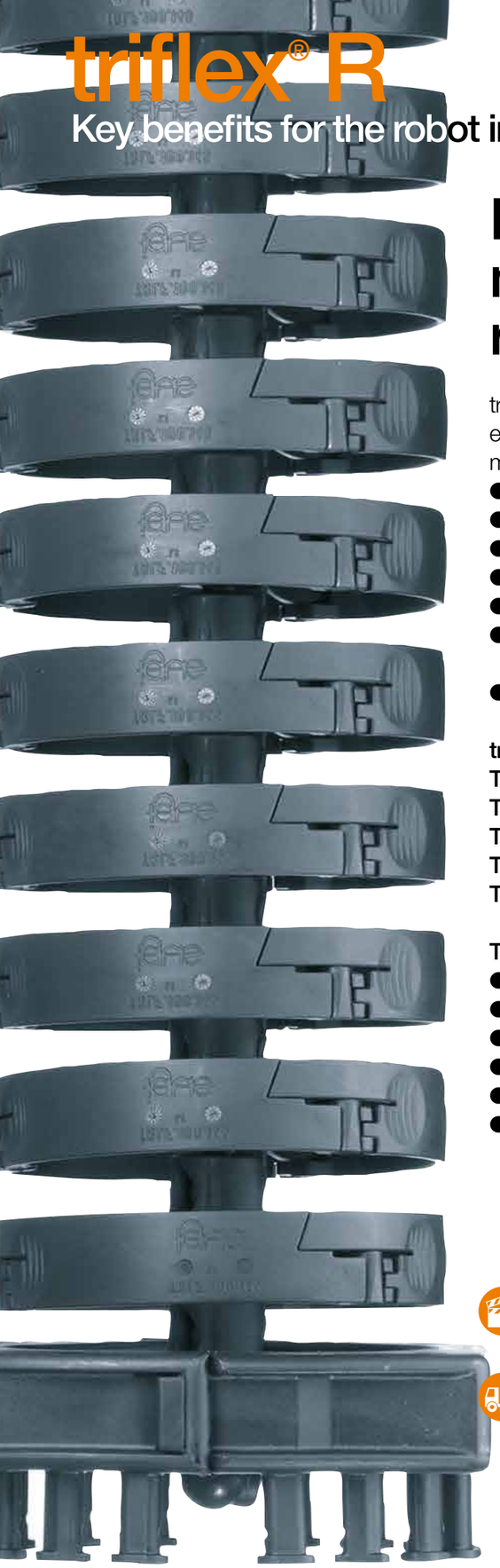

For multi-axis movements and robots - triflex® R

triflex® R (R for "round") is the third generation of multi-axis igus® e-chains®. The key design characteristics of igus® triflex® R have made this product very successful in the robot industry.

- Defined torsion stop-dog on each e-chain® link
- Defined minimum bend radius
- High tensile strength due to ball and socket joint
- Compact retraction system options to prevent loop formation
- Fibre-rod option for partial directional control and reinforcement
- No extra support elements required, e.g. steel cables, spring suspensions
- Wide range of accessories

triflex® R available in 5 versions from stock

TRC closed design with smooth and robust exterior
TRE "easy" design, easy to fill from outside
TRCF closed design with snap-lock mechanism
TRL very lightweight, with "easy" design
TRLF light version with snap-lock mechanism

Typical industries and applications

- The first choice for multi-axis robots
- Machine tools
- Handling machines - 6-axis
- Material handling
- Packaging machines
- General machinery, etc.

Assembly video available online at
► www.igus.eu/triflexR_assembly

Available from stock. Ready to ship in 24 - 48hrs.*

*Average time before the ordered goods are dispatched.

triflex® R features

The defined torsion stop ensures an even distribution of the torsional load across the entire length

A tough, bend radius stop-dog actively prevents cables and hoses from kinking

Interior separation: two or three chamber design for reliable cable guidance

Openable - series TRCF and TRLF have snap-lock mechanism for easy filling

Tensile strength is absorbed directly by the e-chain® - no additional supports are necessary

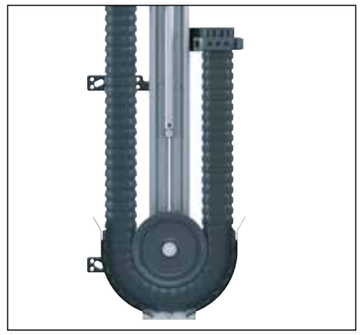

4 retraction system options available to prevent formation of loops in the robot's working area

Standard and light mounting brackets available with or without integrated strain relief. Some versions available in ESD material, from stock

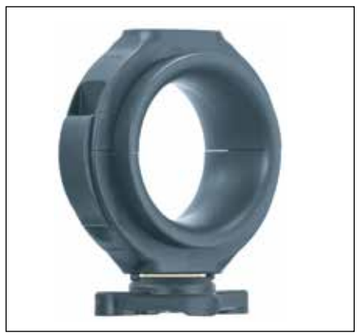

Mounting brackets options with gliding feed-through and swivel bearing. Bearing with a maintenance-free igubal® ball and socket joint

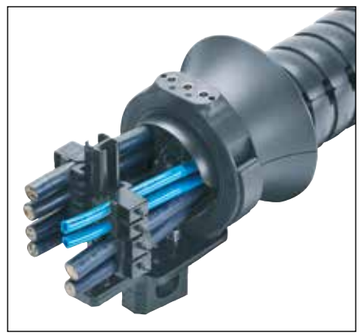

Various heavy duty and compact connections and quick-change units are available

Serie TRC - electrically conductive ESD e-chains® - several series available from stock

UL94-V2 classification

iF product design award
2004 for igus® series TRC
2007 for igus® series TRL
2013 for igus® series TRLF

Selection table

Series TRC - enclosed design

chip protection,
smooth outer contour

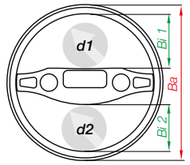

Series	Inner width Bi1 [mm]	Inner width Bi2 [mm]	Outer width Ba [mm]	Bend radius R [mm]	Max. cable ø d1 [mm]	Max. cable ø d2 [mm]	Pitch [mm]	Links per m	Page
TRC.30	12	10	34.5	050	10	8	11.3	89	28
TRC.40	15	13	43	058	13	11	13.9	72	28
TRC.50	18.8	16.2	54	080	16.5	14	17.4	58	28
TRC.60	22.5	19.5	65	087	20.5	17.5	20.4	49	28
TRC.70	28	24	81	110	26	22	25.6	39	28
TRC.85	33	28	94.5	135	31	26	30.6	33	28
TRC.100	37.5	32.5	108	145	35.5	30.5	34.5	29	28
TRC.125 1)	433.	433.	135	182	41	41	44.1	23	28

Series TRE "easy" design

very easy to fill,
cables are simply pushed in

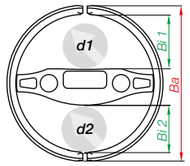

Series	Inner width Bi1 [mm]	Inner width Bi2 [mm]	Outer width Ba [mm]	Bend radius R [mm]	Max. cable ø d1 [mm]	Max. cable ø d2 [mm]	Pitch [mm]	Links per m	Page
TRE.30	12	10	34.5	050	10	8	11.3	89	30
TRE.40	15	13	43	058	13	11	13.9	72	30
TRE.50	18.8	16.2	54	080	16.5	14	17.4	58	30
TRE.60	22.5	19.5	65	087	20.5	17.5	20.4	49	30
TRE.70	28	24	81	110	26	22	25.6	39	30
TRE.85	33	28	94.5	135	31	26	30.6	33	30
TRE.100	37.5	32.5	108	145	35.5	30.5	34.5	29	30
TRE.125 1)	433.	433.	135	182	41	41	44.1	23	30

Series TRCF - closed design with snap lock mechanism

chip protection,
smooth outer contour

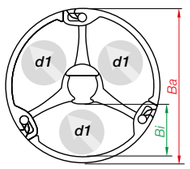

Series	Inner width Bi1 [mm]	Inner width Bi2 [mm]	Outer width Ba [mm]	Bend radius R [mm]	Max. cable ø d1 [mm]	Max. cable ø d2 [mm]	Pitch [mm]	Links per m	Page
TRCF.65	22.3	–	70.2	100	20	–	23.1	44	32
TRCF.65 3)	22.3	–	70.2	200	20	–	23.1	44	32
TRCF.85	30	–	94.5	135	28	–	30.6	33	32
TRCF.85 3)	30	–	94.5	240	28	–	30.6	33	32
TRCF.100	34.3	–	108	145	32	–	34.5	29	32

1) Max. cable diameter 41mm. Max. cable diameter changes to Ø 36mm, if lengthening or shortening an already populated triflex® R

2) TRL 30 with 2-chamber design

3) Special size with larger bend radius and a special range of accessories

Available from stock. Ready to ship in 24 - 48hrs.*

*Average time before the ordered goods are dispatched.

Selection table

Series TRL - light version of the "easy"-design

easy to fill and cost-effective

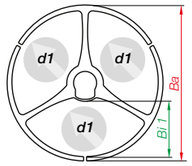

Series	Inner width Bi1 [mm]	Inner width Bi2 [mm]	Outer width Ba [mm]	Bend radius R [mm]	Max. cable ø d1 [mm]	Max. cable ø d2 [mm]	Pitch [mm]	Links per m	Page
TRL.30 2)	12.5	11	34.5	050	10	8	11.3	89	34
TRL.40	15	–	45	058	13	–	13.9	72	34
TRL.60	23	–	65	087	20.5	–	20.4	49	34
TRL.70	28	–	81	110	26	–	25.6	39	34
TRL.100	38	–	108	145	35.5	–	34.5	29	34

Series TRLF - light version with snap-lock mechanism

lightweight and cost-effective

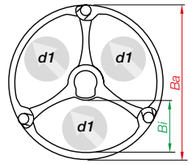

Series	Inner width Bi1 [mm]	Inner width Bi2 [mm]	Outer width Ba [mm]	Bend radius R [mm]	Max. cable ø d1 [mm]	Max. cable ø d2 [mm]	Pitch [mm]	Links per m	Page
TRLF.65	24.4	–	70.2	100	22	–	23.1	44	36
TRLF.85	32.8	–	94.5	135	30	–	30.6	33	36
TRLF.100	37.5	–	108	145	35.5	–	34.4	29	36
TRLF.125	46.8	–	135	182	44.5	–	44.1	23	36

triflex® R retraction system | Overview

Series triflex® R	System triflex® R	For triflex® R e-chains®	For ø Index [mm]	Page
	**RS** modular retraction system	TRC·TRE	40 - 100	74
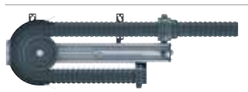	**RSP** pneumatic retraction system	TRC·TRE·TRCF	60 - 125	82
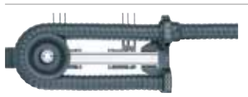	**RSE** cost-effective retraction system with deflection	TRC·TRE	40 - 50	90
	**RSE·RSEC linear** compact retraction system	TRC·TRE·TRCF	40 - 100	98
	**RSEL·RSSL** cost-effective linear retraction system	TRC·TRE·TRCF	60 - 100	108

Technical data

Technical data

Speed / acceleration	upon request
Material - permitted temperature °C, igumid® G (TRLF/TRCF)	**-40°C/+120°C**
Material - permitted temperature °C, igumid® NB (TRC/TRE/TRL)	**-40°C / +80°C**
Flammability class, igumid® G (TRLF/TRCF)	**VDE 0304 IIC UL94-HB**
Flammability class, igumid® NB (TRC/TRE/TRL)	**VDE 0304 IIC UL94-V2**

Reduce installation times with easy-to-use disassembly tools

Easy-to-use disassembly tools for triflex® TRE (B version) and TRCF. Easy disassembly at any point along the e-chain®, even when full.

More information

► www.igus.eu/triflex_B_disassemblytool

Assembly video available online at
► www.igus.eu/triflexR_assembly

For series	Part No.
TRE.B	Disassembly tool
TRE.40.B	MAT0050175
TRE.50.B	MAT0051190
TRE.60.B / TRE.70.B	MAT0051135
TRE.85.B	MAT0050170
TRE.100.B	MAT0050172

For series	Part No.
TRE.B	Disassembly tool
TRCF.65	MAT0051135
TRCF.85	MAT0050170
TRCF.100	MAT0050172

Applications

igus® triflex® R TRLF - light version, easily openable by hand or with a screwdriver

igus® triflex® R TRCF - closed version, openable with a screwdriver

triflex® RS for a low profile retraction system. Integrated fibre rods generate the directed pretension so that loops do not form in the working area

Pneumatic retraction system triflex® RSP - prevents loop forming on the robot

triflex® TR.RSE.40.L or R, cost-effective and lightweight retraction system with deflection roller, for small robots

TR.RSE linear retraction system for triflex® R, sizes 40-125

triflex® R TRC

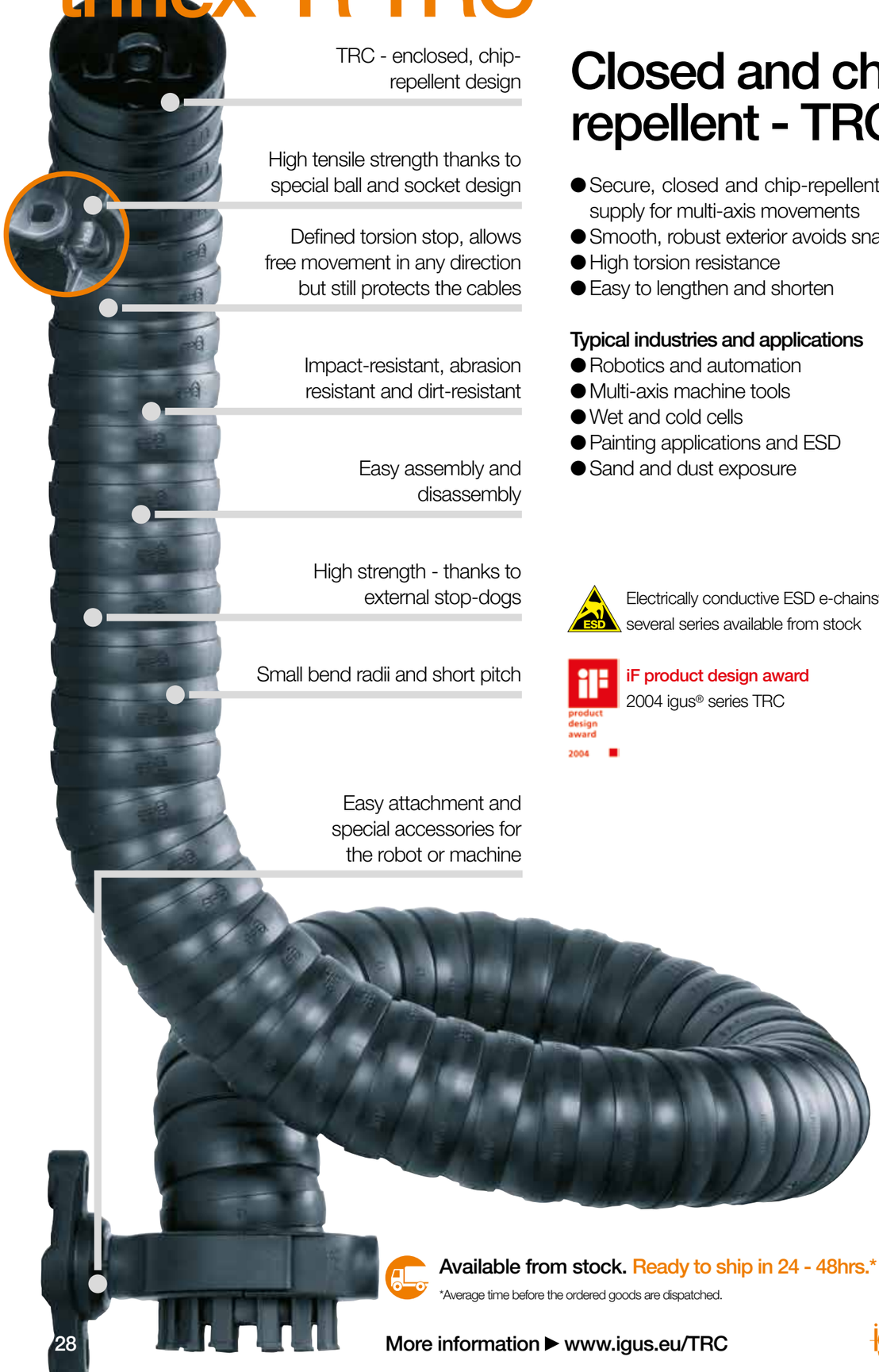

TRC - enclosed, chip-repellent design

High tensile strength thanks to special ball and socket design

Defined torsion stop, allows free movement in any direction but still protects the cables

Impact-resistant, abrasion resistant and dirt-resistant

Easy assembly and disassembly

High strength - thanks to external stop-dogs

Small bend radii and short pitch

Easy attachment and special accessories for the robot or machine

Closed and chip-repellent - TRC

- Secure, closed and chip-repellent energy supply for multi-axis movements
- Smooth, robust exterior avoids snagging
- High torsion resistance
- Easy to lengthen and shorten

Typical industries and applications

- Robotics and automation
- Multi-axis machine tools
- Wet and cold cells
- Painting applications and ESD
- Sand and dust exposure

Electrically conductive ESD e-chains® - several series available from stock

iF product design award
2004 igus® series TRC

Available from stock. Ready to ship in 24 - 48hrs.*

*Average time before the ordered goods are dispatched.

More information ▶ www.igus.eu/TRC

Product range

Robotic applications, closed, chip-repellent

e-tubes | Series TRC | Totally enclosed, non-openable

Part No. e-tubes	Bi1 [mm]	Bi2 [mm]	Ba [mm]	R [mm]	d1 [mm]	d2 [mm]	Pitch [mm]	Links per m	Weight [kg/m]
TRC.30. 050.0	12	10	34.5	050	10	8	11.3	89	≈ 0.27
TRC.40. 058.0▲	15	13	43	058	13	11	13.9	72	≈ 0.37
TRC.50. 080.0	18.8	16.2	54	080	16.5	14	17.4	58	≈ 0.59
TRC.60. 087.0▲	22.5	19.5	65	087	20.5	17.5	20.4	49	≈ 0.85
TRC.70. 110.0▲	28	24	81	110	26	22	25.6	39	≈ 1.32
TRC.85. 135.0	33	28	94.5	135	31	26	30.6	33	≈ 1.75
TRC.100.145.0	37.5	32.5	108	145	35.5	30.5	34.5	29	≈ 2.38
TRC.125.182.0	433.	433.	135	182	41	41 1)	44.1	23	≈ 4.70

▲ ESD version (Electro Static Discharge) available from stock. More information ▶ **www.igus.eu/esd**

1) TRE.125 max. cable diameter Ø 41mm. Max. cable diameter changes to Ø 36mm when an already populated e-chain needs to be shortened or lengthened

Installation dimensions

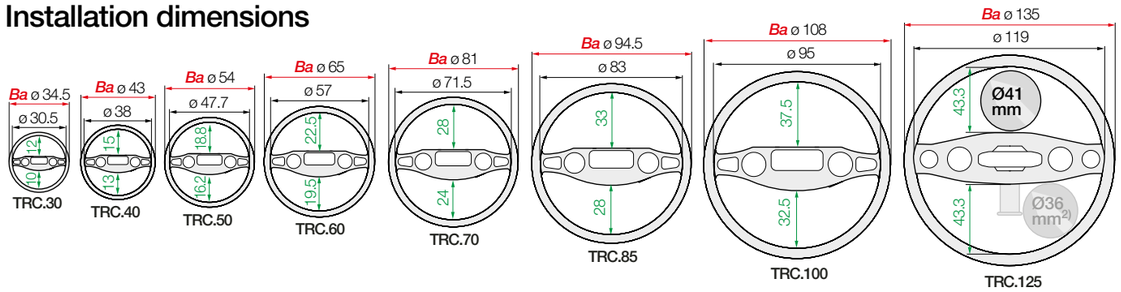

ESD - many sizes from stock

- Standardised product made from igumid® ESD
- ESD material tested with over 10 million cycles for highest requirements
- Short delivery times including mounting brackets and interior separation; 24hrs, from stock

More information ▶ www.igus.eu/esd

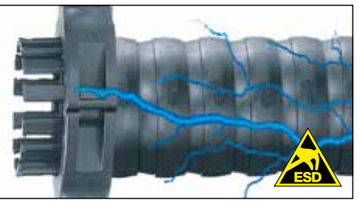

igus 3D CAD, configurators, service life calculation and more ▶ www.igus.eu/triflexR

triflex® R TRE

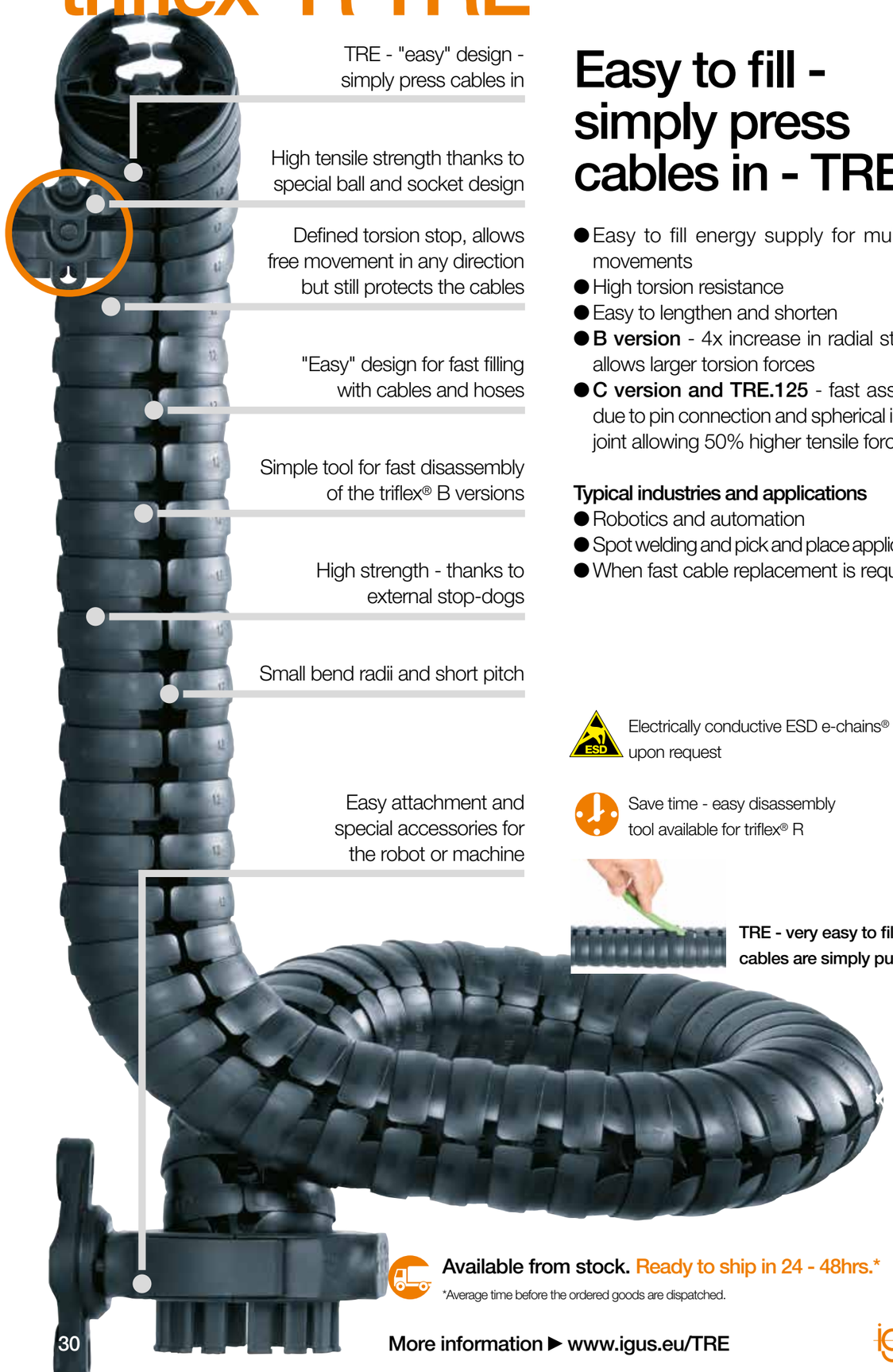

Easy to fill - simply press cables in - TRE

- Easy to fill energy supply for multi-axis movements
- High torsion resistance
- Easy to lengthen and shorten
- **B version** - 4x increase in radial stability, allows larger torsion forces
- **C version and TRE.125** - fast assembly due to pin connection and spherical igubal® joint allowing 50% higher tensile forces

Typical industries and applications

- Robotics and automation
- Spot welding and pick and place applications
- When fast cable replacement is required

Electrically conductive ESD e-chains® upon request

Save time - easy disassembly tool available for triflex® R

Available from stock. Ready to ship in 24 - 48hrs.*

*Average time before the ordered goods are dispatched.

More information ▶ www.igus.eu/TRE

Product range

Robotic applications, easy filling

e-chains® | Series TRE | "easy" design - simply press cables in

Part No. e-chains®	Bi1 [mm]	Bi2 [mm]	Ba [mm]	R [mm]	d1 [mm]	d2 [mm]	Pitch [mm]	Links per m	Weight [kg/m]
TRE.30. 050.0.B	12	10	34.5	050	10	8	11.3	89	≈ 0.26
TRE.40. 058.0.B	15	13	43	058	13	11	13.9	72	≈ 0.36
TRE.50. 080.0.B	18.8	16.2	54	080	16.5	14	17.4	58	≈ 0.56
TRE.60. 087.0.B	22.5	19.5	65	087	20.5	17.5	20.4	49	≈ 0.83
TRE.70. 110.0.B	28	24	81	110	26	22	25.6	39	≈ 1.30
TRE.85. 135.0.B	33	28	94.5	135	31	26	30.6	33	≈ 1.67
TRE.100.145.0.B / C 1)	37.5	32.5	108	145	35.5	30.5	34.5	29	≈ 2.35
TRE.125.182.0	433.	433.	135	182	41	41 2)	44.1	23	≈ 4.40

B-Series = 4-x higher torsion forces C-Series = quick assembly, 50% higher forces

1) Available as C-Version Part No. TRE.100.145.0.C

2) TRE.125: max. cable diameter Ø 41mm. Max. cable diameter changes to Ø 36mm when an already populated e-chain needs to be shortened or lengthened TRE.LOCK

Installation dimensions

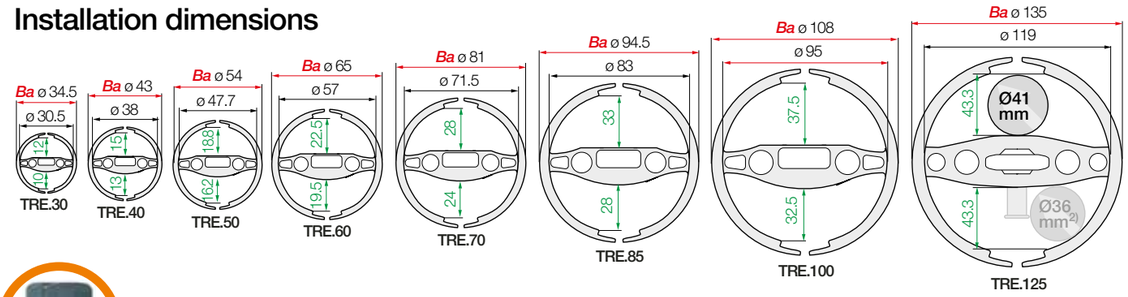

TRE.LOCK clips

Clips for a secure fit in the mounting bracket. Supplied with every mounting bracket. Please use the Part No. on the right for reordering individual parts.

Part No. as an individual part	Size [mm]
MAT0072125	30/40
MAT0074101	50/60
MAT0072126	70/85

Part No. as an individual part	Size [mm]
MAT0072127	100
MAT0072128	125

3D CAD, configurators, service life calculation and more ▶ www.igus.eu/triflexR

triflex® R TRCF

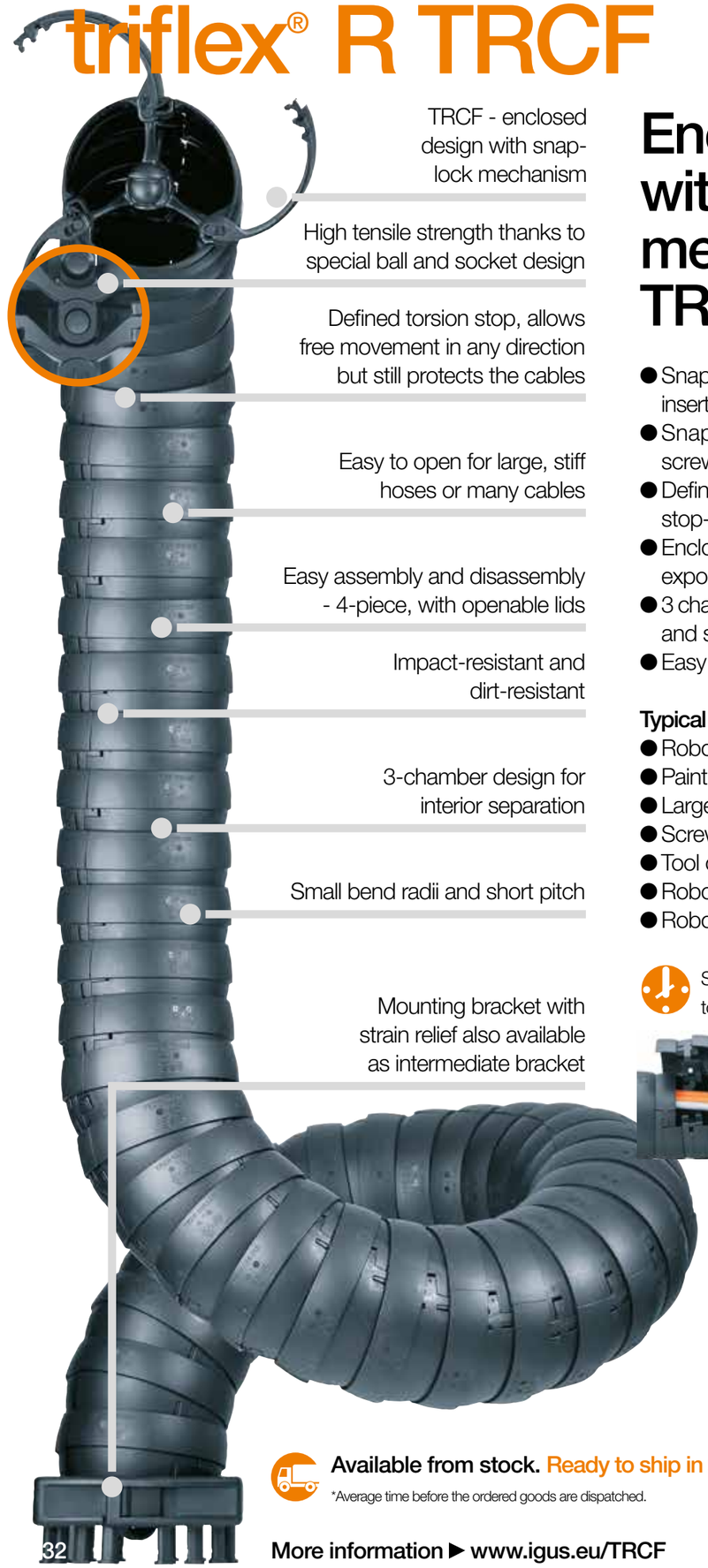

TRCF - enclosed design with snap-lock mechanism

High tensile strength thanks to special ball and socket design

Defined torsion stop, allows free movement in any direction but still protects the cables

Easy to open for large, stiff hoses or many cables

Easy assembly and disassembly - 4-piece, with openable lids

Impact-resistant and dirt-resistant

3-chamber design for interior separation

Small bend radii and short pitch

Mounting bracket with strain relief also available as intermediate bracket

Enclosed design with snap-lock mechanism - TRCF

- Snap-lock mechanism for fast opening to insert large cables or hoses
- Snap lock mechanism openable with a screwdriver
- Defined minimum bend radius and torsion stop-dog for optimum cable protection
- Enclosed version, for use with dirt and chip exposure
- 3 chamber design for ideal cable distribution and separation
- Easy to lengthen and shorten

Typical industries and applications

- Robotics and automation
- Painting applications
- Large hydraulic hoses
- Screw and rivet feeds
- Tool changer applications
- Robot for laser welding
- Robot for screw and rivet applications

Save time - easy disassembly tool available for triflex® R

Flip open, insert cable, and close snap lock mechanism - then ready to run!

Available from stock. Ready to ship in 24 - 48hrs.*

*Average time before the ordered goods are dispatched.

More information ▶ www.igus.eu/TRCF

Product range

Closed design, chip-resistant, quick filling

e-tubes | Series TRCF | Fully enclosed design, with snap-lock mechanism

Part No. e-tubes	Bi1 [mm]	Ba [mm]	R [mm]	d1 [mm]	Pitch [mm]	Links per m	Weight [kg/m]
TRCF.65. 100.0	22.3	70.2	100	20	23.1	44	≈ 1.10
TRCF.65. 200.0 1)	22.3	70.2	200	20	23.1	44	≈ 1.10
TRCF.85. 135.0	30	94.5	135	28	30.6	33	≈ 2.10
TRCF.85. 240.0 2)	30	94.5	240	28	30.6	33	≈ 2.10
TRCF.100.145.0	34.3	108	145	32	34.5	29	≈ 2.70

1) Special size Part No. **TRCF.65.200.0** with 200mm bend radius and a range of accessories

2) Special size Part No. **TRCF.85.240.0** with 240mm bend radius and a range of accessories

Installation dimensions

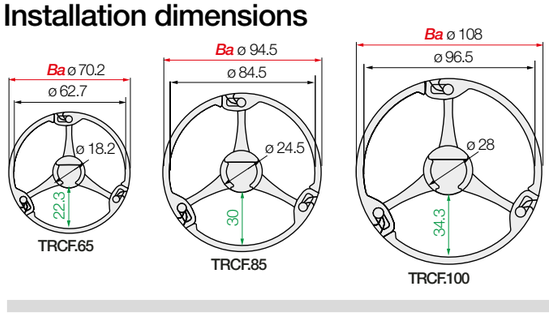

Snap-lock mechanism for fast opening, video online
▶ **www.igus.eu/TRLFlip**

Special sizes with larger bend radius

- The large bend radii 200/240mm increase the service life of laser light cables by preventing kinks
- Special range of accessories available
- Special sizes Part No. **TRCF.65.200.0** and **TRCF.85.240.0**

More information ▶ www.igus.eu/TRCF

3D CAD, configurators, service life calculation and more ▶ www.igus.eu/triflexR

triflex® R TRL

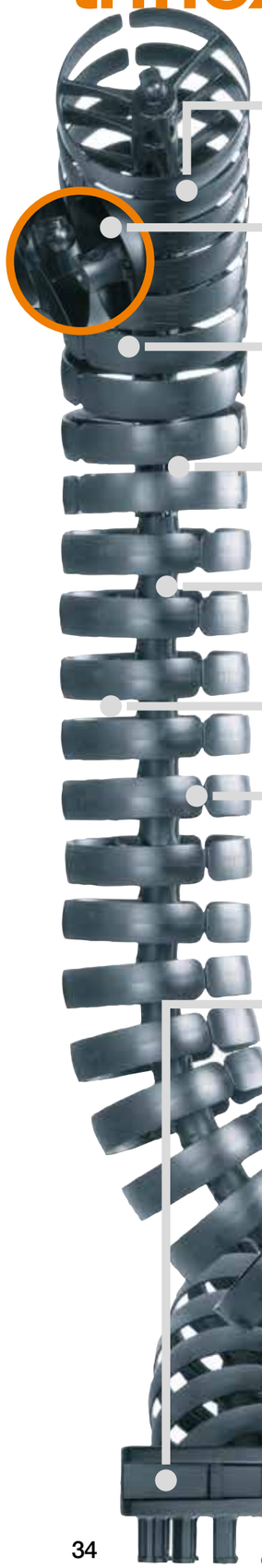

TRL - light and cost-effective with "easy" design

High tensile strength thanks to special ball and socket design

Defined torsion stop, allows free movement in any direction but still protects the cables

"Easy" design for fast filling with cables and hoses

Easy assembly and disassembly

Extremely lightweight due to one-piece design

Small bend radii and short pitch

Mounting bracket with strain relief also available as intermediate bracket

Lightweight and cost-effective - TRL

- Very easy to fill
- Multi-axis e-chain® for simple applications
- Easy to lengthen and shorten

Typical industries and applications

- Robot axes 1-3
- Non-robotic applications
- Bundling cables for operator controls
- Filament feeds on 3D printers
- Office applications

iF product design award
2007 igus® Series TRL

Available from stock. Ready to ship in 24 - 48hrs.*

*Average time before the ordered goods are dispatched.

Product range

Robotic applications, light and cost-effective

e-chains® | Series TRL | Light version with "easy" design - simply press cables in

Part No. e-chains®	Bi1 [mm]	Bi2 [mm]	Ba [mm]	R [mm]	d1 [mm]	d2 [mm]	Pitch [mm]	Links per m	Weight [kg/m]
TRL.30. 050.0 1)	12.5	11	34.5	050	10	8	11.3	89	≈ 0.26
TRL.40. 058.0	15	–	45	058	13	–	13.9	72	≈ 0.29
TRL.60. 087.0	23	–	65	087	20.5	–	20.4	49	≈ 0.49
TRL.70. 110.0	28	–	81	110	26	–	25.6	39	≈ 0.82
TRL.100.145.0	38	–	108	145	35.5	–	34.5	29	≈ 1.42

1) Only available with 2-chamber design

Installation dimensions

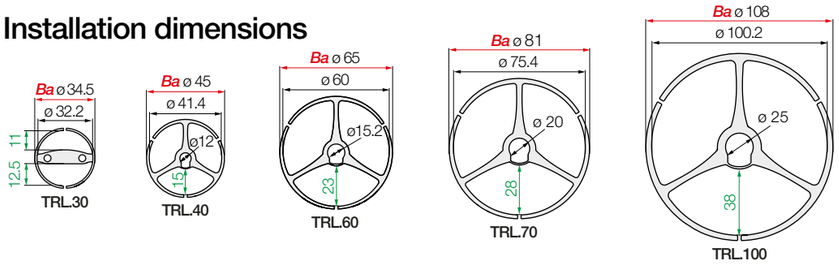

triflex® R TRLF

TRLF - light and cost-effective with snap-lock mechanism

High tensile strength thanks to special ball and socket design

Defined torsion stop, allows free movement in any direction but still protects the cables

Easy to open for large, stiff hoses or many cables

Easy assembly and disassembly

3-chamber design for interior separation

Small bend radii and short pitch

Lightweight mounting bracket available with strain relief or as intermediate bracket

Lightweight, with snap-lock mechanism - TRLF

- Snap-lock mechanism for fast opening
- Openable by hand or with a screwdriver
- For large, stiff hoses or many cables
- Economical multi-axis e-chain® for less demanding applications
- Easy to lengthen and shorten

Typical industries and applications

- Painting hoses
- Rivet feeds
- Robot axes 1-3
- Non-robotic applications
- Special machine construction
- High-tech design

iF product design award
2013 igus® series TRLF

Flip open, insert cable, and close snap lock mechanism - then ready to run!

Available from stock. Ready to ship in 24 - 48hrs.*

*Average time before the ordered goods are dispatched.

More information ▶ www.igus.eu/TRLF

Product range

Quick filling with larger hoses and cables

e-chains® | Series TRLF | Light version with snap lock mechanism

Part No. e-chains®	Bi1 [mm]	Ba [mm]	R [mm]	d1 [mm]	Pitch [mm]	Links per m	Weight [kg/m]
TRLF.65.100.0	24.4	70.2	100	22	23.1	44	≈ 0.79
TRLF.85.135.0	32.8	94.5	135	30	30.6	33	≈ 1.45
TRLF.100.145.0	37.5	108	145	35.5	34.5	29	≈ 1.90
TRLF.125.182.0	46.8	135	182	44.5	44.1	23	≈ 4.13

Installation dimensions

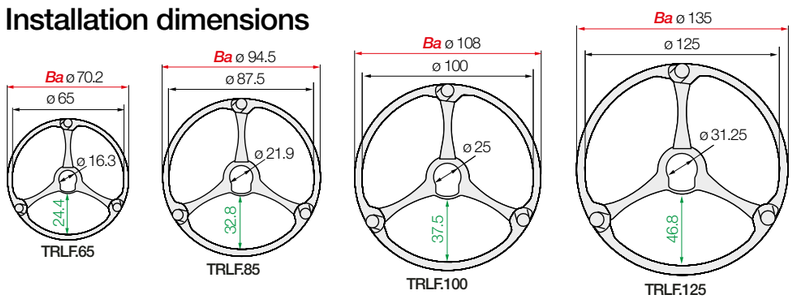

Snap-lock mechanism for fast opening, video online
▶ www.igus.eu/TRLF

Test before you invest ...
Order free triflex® R sleeves now - find out for yourself the quality of the different triflex® R e-chains® series.
More information
▶ www.igus.eu/triflexR

Sample: TRC.50/TRE.50 with mounting bracket and strain relief Part No. MAT0075264

Sample: TRL.65/TRLF.65 with mounting bracket and strain relief Part No. MAT0075263

triflex® R accessories

Standard mounting brackets with strain relief

With integrated strain relief tiewrap plates
TR.40.01 - TR.100.01

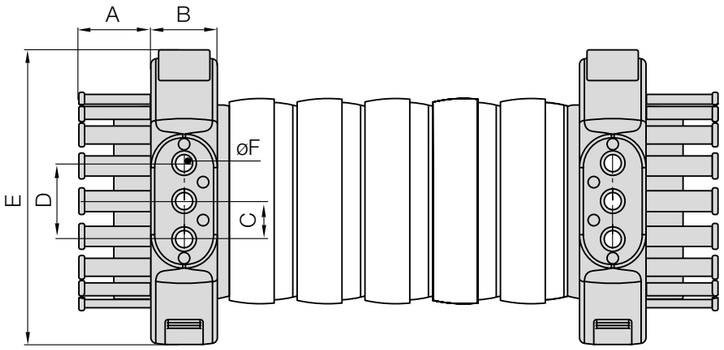

- Recommended for TRC/TRE/TRCF, also compatible with TRL/TRLF
- Standard fixation onto the robot or machine, with strain relief

Standard mounting brackets | With strain relief

TR.40.01 - TR.100.01

Ø Index	Part No. with strain relief	A [mm]	B [mm]	C [mm]	D [mm]	E [mm]	F [mm]
30.	Alternative: light mounting bracket	–	–	–	–	–	–
40.	**TR.40.01**.M6 1) 2)	17.8	21	13.5	27	84.5	6.5
50.	**TR.50.01**.M6 1)	21	21	13.5	27	84.5	6.5
60.	**TR.60.01**.M8 1) 2)	25	32	20	40	126	9
65.	**TR.65.01**.M8 1)	25	32	20	40	126	9
65. (*R 200*)	**TR.65.200.01**.M8 1) 4)	25	32	20	40	126	9
70.	**TR.70.01**.M8 1) 2)	25	32	20	40	126	9
85.	**TR.85.01**.M8 1)	38	35	20	40	155	9
85. (*R 240*)	**TR.85.240.01**.M8 1) 4)	38	35	20	40	155	9
100.	**TR.100.01**.M8 1)	38	35	20	40	155	9
125.	Alternative: standard mounting bracket without strain relief						

Strain reliefs are for use on the fixed end and/or moving end.

Standard: through holes in Ø F - 1) option: with threaded bushings, steel, M6/M8

2) ESD version (Electro Static Discharge) available from stock. More information ▶ **www.igus.eu/esd**

4) Only for special size with larger bend radius

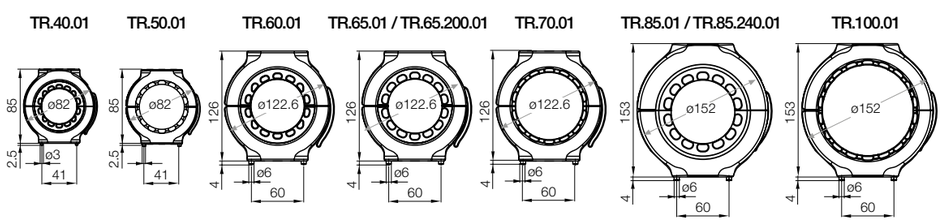

triflex® R accessories

Standard mounting brackets without strain relief

Without strain relief, only for
TR.40.02 - TR.100.02

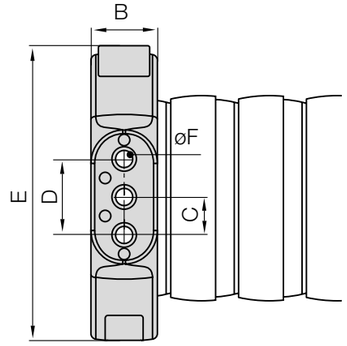

Without strain relief, only for
TR.125.02

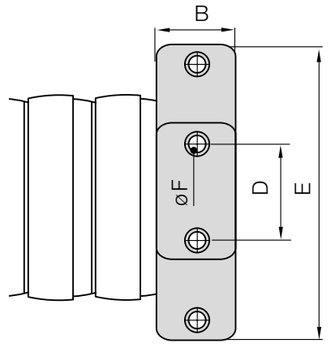

- Recommended for TRC/TRE/TRCF, also compatible with TRL/TRLF
- Standard fixation onto the machine/robot, without strain relief
- Can also serve as intermediate bracket

Standard mounting brackets | Without strain relief

TR.40.02 - TR.100.02

TR.125.02

Ø Index	Part No. **without** strain relief or as intermediate bracket	A [mm]	B [mm]	C [mm]	D [mm]	E [mm]	F [mm]
30.	Alternative: light mounting bracket	–	–	–	–	–	–
40.	**TR.40.02**.M6 1)	–	21	13.5	27	84.5	6.5
50.	**TR.50.02**.M6 1)	–	21	13.5	27	84.5	6.5
60.	**TR.60.02**.M8 1)	–	32	20	40	126	9
65.	**TR.65.02**.M8 1)	–	32	20	40	126	9
65. (*R 200*)	**TR.65.200.02**.M8 1) 4)	–	32	20	40	126	9
70.	**TR.70.02**.M8 1)	–	32	20	40	126	9
85.	**TR.85.02**.M8 1)	–	35	20	40	155	9
85. (*R 240*)	**TR.85.240.02**.M8 1) 4)	–	35	20	40	155	9
100.	**TR.100.02**.M8 1)	–	35	20	40	155	9
125.	**TR.125.02**.M8 1)	–	40	–	64	190	9

Standard: through holes in Ø F - 1) option: with threaded bushings, steel, M6/M8

2) ESD version (Electro Static Discharge) available from stock. More information ▶ **www.igus.eu/esd**

4) Only for special size with larger bend radius

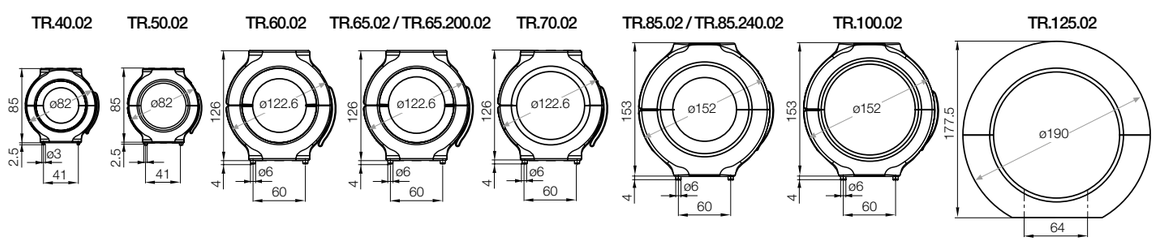

triflex® R accessories

Light mounting brackets with strain relief

Short strain relief
TL.30.01.Z1 - TL.100.01.Z1

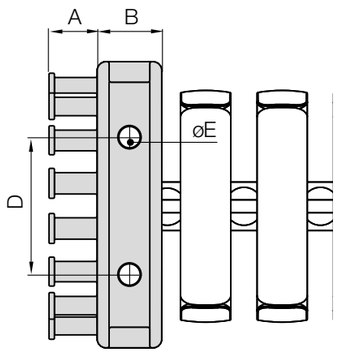

Long strain relief
TL.40.01.Z2 - TL.100.01.Z2

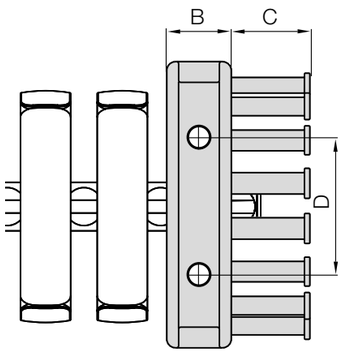

- Recommended for TRL/TRLF, also compatible with TRC/TRE/TRCF
- Light fixation onto the machine/robot, with strain relief
- Options with long or short strain relief

Light mounting brackets | With strain relief

TL.30.01.Z1 - TL.100.01.Z1

TL.40.01.Z2 - TL.100.01.Z2

Ø Index	Part No. with **short** strain relief	Part No. with **long** strain relief	A [mm]	B [mm]	C [mm]	D [mm]	E [mm]
30.	**TL.30.01.Z1**	–	12.5	13	–	24	4.5
40.	**TL.40.01.Z1** 1)	**TL.40.01.Z2**	12.5	14	20	36	5.8
50.	Alternative: standard mounting bracket		–	–	–	–	–
60.	**TL.60.01.Z1** 1)	**TL.60.01.Z2**	17	20	27	48	5.8
65.	**TL.65.01.Z1** 1)	–	13.5	27	–	64	6.5
65. (*R 200*)	Alternative: standard mounting bracket		–	–	–	–	–
70.	**TL.70.01.Z1** 1)	**TL.70.01.Z2**	17.5	27	27.5	64	6.5
85.	**TL.85.01.Z1**	–	26.5	30	–	64	6.5
85. (*R 240*)	Alternative: standard mounting bracket		–	–	–	–	–
100.	**TL.100.01.Z1** 1)	**TL.100.01.Z2**	22.5	30	42.5	64	6.5
125.	Alternative: standard mounting bracket		–	–	–	–	–

1) For moving end (ball) suitable only for series TRL/TRLF

TL.30.01.Z1 TL.40.01.Z1 TL.40.01.Z2 TL.60.01.Z1 TL.60.01.Z2 TL.65.01.Z1 TL.70.01.Z1 TL.70.01.Z2 TL.85.01.Z1 TL.100.01.Z1 TL.100.01.Z2

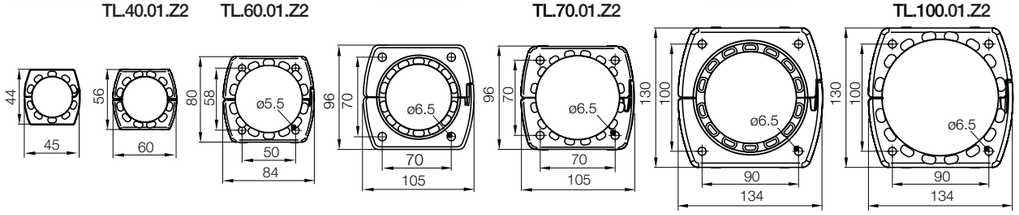

triflex® R accessories

Light mounting brackets without strain relief

Without strain relief
TL.30.01.Z0 - TL.100.01.Z0

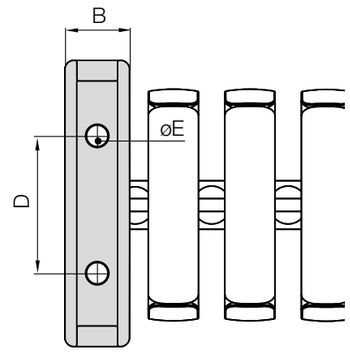

Can also serve as intermediate bracket
TL.30.01.Z0 - TL.100.01.Z0

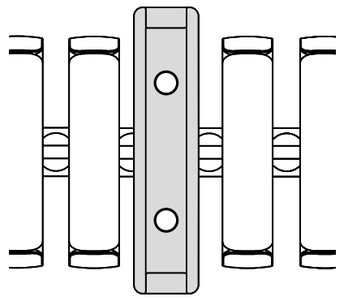

- Recommended for TRL/TRLF, also compatible with TRC/TRE/TRCF
- Light fixation onto the machine/robot, without strain relief
- Can also serve as intermediate bracket

Light mounting brackets | Without strain relief

TL.30.01.Z0 - TL.100.01.Z0

Ø Index	Part No. **without** strain relief or as intermediate bracket	A [mm]	B [mm]	C [mm]	D [mm]	E [mm]
30.	**TL.30.01.Z0**	–	13	–	24	4.5
40.	**TL.40.01.Z0**	–	14	–	36	5.8
50.	Alternative: standard mounting bracket	–	–	–	–	–
60.	**TL.60.01.Z0**	–	20	–	48	5.8
65.	**TL.65.01.Z0**	–	27	–	64	6.5
65. (*R 200*)	Alternative: standard mounting bracket	–	–	–	–	–
70.	**TL.70.01.Z0**	–	27	–	64	6.5
85.	**TL.85.01.Z0**	–	30	–	64	6.5
85. (*R 240*)	Alternative: standard mounting bracket	–	–	–	–	–
100.	**TL.100.01.Z0**	–	30	–	64	6.5
125.	Alternative: standard mounting bracket	–	–	–	–	–

TL.30.01.Z0 TL.40.01.Z0 TL.60.01.Z0 TL.65.01.Z0 TL.70.01.Z0 TL.85.01.Z0 TL.100.01.Z0

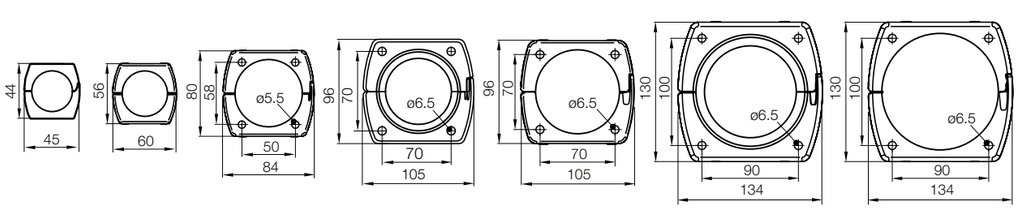

triflex® R accessories

Mounting bracket with radius support

Mounting bracket with radius support, only for TR.40.09 - TR.100.09

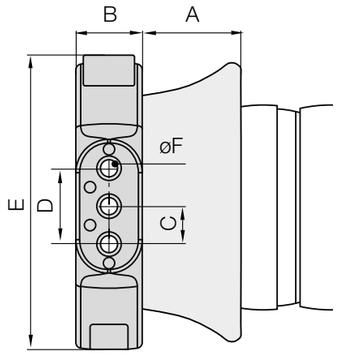

Mounting bracket with radius support, only for TR.125.09

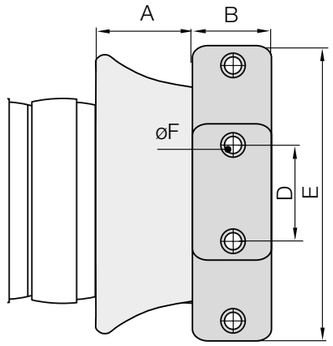

- The triflex® R radius support for triflex® R energy supply at the most highly stressed points (axis 6)
- Provides higher operational reliability for robotic applications

Mounting brackets | With radius support | For TRC·TRE·TRCF·TRL·TRLF

TR.40.09 - TR.100.09

TR.125.09

Ø Index		Part No. with radius support	A [mm]	B [mm]	C [mm]	D [mm]	E [mm]	F [mm]
30.	▶	–	–	–	–	–	–	–
40.	▶	**TR.40.09**.M6 1)	28	21	13.5	27	84.5	6.5
50.	▶	**TR.50.09**.M6 1)	38	21	13.5	27	84.5	6.5
60.	▶	**TR.60.09**.M8 1)	38	32	20	40	126	9
65.	▶	**TR.65.09**.M8 1)	45	32	20	40	126	9
65. (*R 200*)	▶	–	–	–	–	–	–	–
70.	▶	**TR.70.09**.M8 1)	43	32	20	40	126	9
85.	▶	**TR.85.09**.M8 1)	49	35	20	40	155	9
85. (*R 240*)	▶	–	–	–	–	–	–	–
100.	▶	**TR.100.09**.M8 1)	67	35	20	40	155	9
125.	▶	**TR.125.09**.M8 1)	72	40	–	64	190	9

Standard: through holes in Ø F

1) Option: with threaded bushings, steel, M6/M8

Strain relief plate - new

- The new strain relief plate is compatible with the standard mounting brackets with no strain relief
- Available in 2 sizes

Ø Index		Part No. Strain relief plate
40 - 50	▶	**TR.919.856**
60 - 100	▶	**TR.918.890**

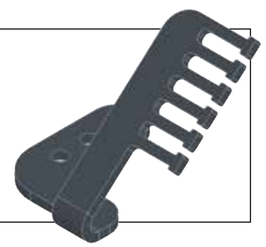

triflex® R accessories

Gliding feed-throughs

Gliding feed-through, only for TL.30.05

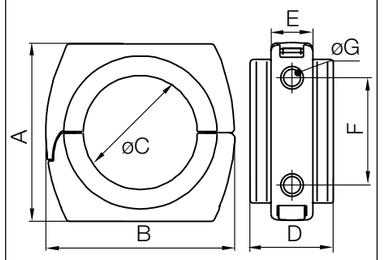

Gliding feed-through, only for TR.40.05 + TR.60-85.05

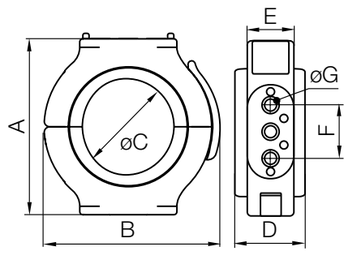

Gliding feed-through, only for TR.50.05 + TR.100.05-TR.125.05

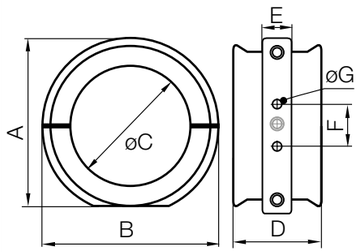

- The gliding feed-through enables easy guidance of the e-chain® and can also be used as an additional guide
- Gliding feed-through with swivel bearing ▶ **Page 46**

Gliding feed-through | For TRC·TRE·TRCF

TR.40.05 + TR.60-85.05

TR.50.05 + TR.100.05 - TR.125.05

Ø Index		Part No. Gliding feed-through	A [mm]	B [mm]	C [mm]	D [mm]	E [mm]	F [mm]	G [mm]
30.	▶	**TL.30.05**	56	60	36	28	14	36	5.8
40.	▶	**TR.40.05**.M6 1)	85	84.5	46	32	21	27	6.5
50.	▶	**TR.50.05**.M6 1)	96	102	58	67	21	27	6.5
60.	▶	**TR.60.05**.M8 1)	126	126	70	50	32	40	9
65.	▶	**TR.65.05**.M8 1)	126	126	75	75	32	40	9
65. (*R 200*)	▶	**TR.65.05**.M8 1)	126	126	75	75	32	40	9
70.	▶	**TR.70.05**.M8 1)	153	155	86	70	35	40	9
85.	▶	**TR.85.05**.M8 1)	153	155	100	84	35	40	9
85. (*R 240*)	▶	**TR.85.05**.M8 1)	153	155	100	84	35	40	9
100.	▶	**TR.100.05**.M8 1) *	162.5	169.5	115	85	28	40	9
125.	▶	**TR.125.05**.M8 1)	179	190	142	84	40	64	9

*TR.100.05 with 3 holes

Standard: through holes in Ø G

1) Option: with threaded bushings, steel, M6/M8

triflex® R accessories

Swivelling mounting brackets with strain relief

With integrated strain relief tiewrap plates

TR.40.03 - TR.100.03

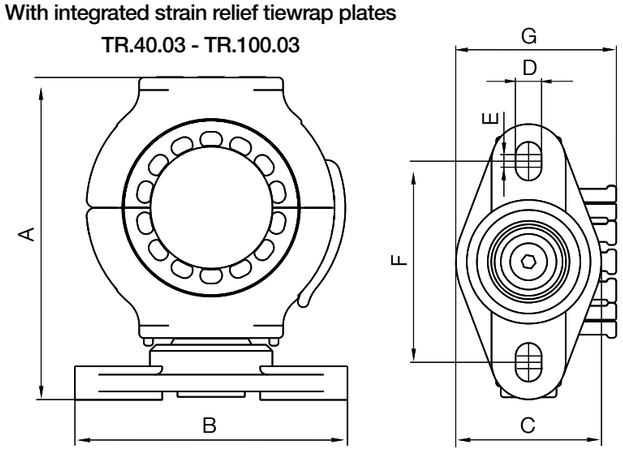

- Standard mounting bracket with strain relief and maintenance-free igubal® spherical bearing
- Pivoting mounting for extreme rotating and reverse bending movements
- For TRC·TRE·TRCF·TRL·TRLF

Swivelling mounting brackets | With strain relief | For TRC·TRE·TRCF·TRL·TRLF

TR.40.03 - TR.100.03

Ø Index	Part No. with strain relief	A [mm]	B [mm]	C [mm]	D [mm]	E [mm]	F [mm]	G [mm]
30.	–	–	–	–	–	–	–	–
40.	**TR.40.03**	105	89	47	8.4	4.1	65	51.8
50.	**TR.50.03**	105	89	47	8.4	4.1	65	55
60.	**TR.60.03**	152	118	65	10.5	5.5	87.5	73.5
65.	**TR.65.03**	152	118	65	10.5	5.5	87.5	73.5
65. (*R 200*)	**TR.65.200.03** [4]	152	118	65	10.5	5.5	87.5	73.5
70.	**TR.70.03**	152	118	65	10.5	5.5	87.5	73.5
85.	**TR.85.03**	179	118	65	10.5	5.5	87.5	88
85. (*R 240*)	**TR.85.240.03** [4]	179	118	65	10.5	5.5	87.5	88
100.	**TR.100.03**	179	118	65	10.5	5.5	87.5	88
125.	–	–	–	–	–	–	–	–

4) Only for special size with larger bend radius

triflex® R accessories

Swivelling mounting brackets without strain relief

Without strain relief

TR.40.04 - TR.100.04

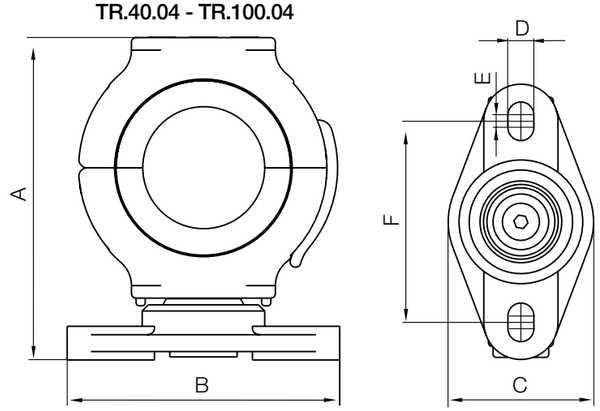

- Standard mounting bracket without strain relief and maintenance-free igubal® spherical bearing
- Pivoting mounting for extreme rotating and reverse bending movements
- For TRC·TRE·TRCF·TRL·TRLF

Swivelling mounting brackets | Without strain relief | For TRC·TRE·TRCF·TRL·TRLF

TR.40.04 - TR.100.04

Ø Index	Part No. without strain relief	A [mm]	B [mm]	C [mm]	D [mm]	E [mm]	F [mm]	G [mm]
30.	–	–	–	–	–	–	–	–
40.	**TR.40.04**	105	89	47	8.4	4.1	65	–
50.	**TR.50.04**	105	89	47	8.4	4.1	65	–
60.	**TR.60.04**	152	118	65	10.5	5.5	87.5	–
65.	**TR.65.04**	152	118	65	10.5	5.5	87.5	–
65. (*R 200*)	**TR.65.200.04** [4]	152	118	65	10.5	5.5	87.5	–
70.	**TR.70.04**	179	118	65	10.5	5.5	87.5	–
85.	**TR.85.04**	179	118	65	10.5	5.5	87.5	–
85. (*R 240*)	**TR.85.240.04** [4]	179	118	65	10.5	5.5	87.5	–
100.	**TR.100.04**	–	–	–	–	–	–	–
125.	–							

4) Only for special size with larger bend radius

triflex® R accessories

Swivel bearing gliding feed-throughs

Swivel bearing gliding feed-throughs
TR.40.07 - TR.100.07

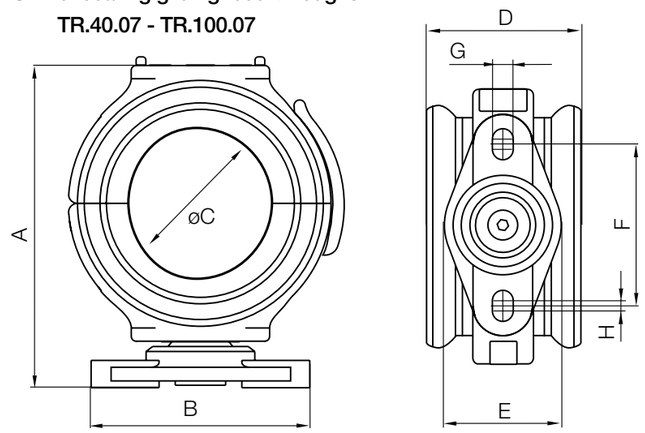

- Gliding feed-through with swivel bearing
- For TRC·TRE·TRCF e-chains®
- Pivoted mounting with maintenance-free igubal® spherical bearings

Swivel bearing gliding feed-throughs | For TRC·TRE·TRCF

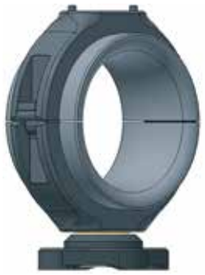

TR.40.07 - TR.100.07

Ø Index	Part No with swivel bearing	A [mm]	B [mm]	C [mm]	D [mm]	E [mm]	F [mm]	G [mm]
30.	–	–	–	–	–	–	–	–
40.	TR.40.07	108	89	46	32	47	65	8.4
50.	TR.50.07	119	89	58	67	47	65	8.4
60.	TR.60.07	156	118	70	50	65	87.5	10.5
65.	TR.65.07	156	118	75	75	65	87.5	10.5
65. (*R 200*)	TR.65.07	156	118	75	75	65	87.5	10.5
70.	TR.70.07	183	118	86	70	65	87.5	10.5
85.	TR.85.07	183	118	100	84	65	87.5	10.5
85. (*R 240*)	TR.85.07	183	118	100	84	65	87.5	10.5
100.	TR.100.07	189	118	115	85	79	87.5	10.5
125.	–	–	–	–	–	–	–	–

triflex® R accessories

Protectors

Protectors
TR.XX.10 / TR.XX.30

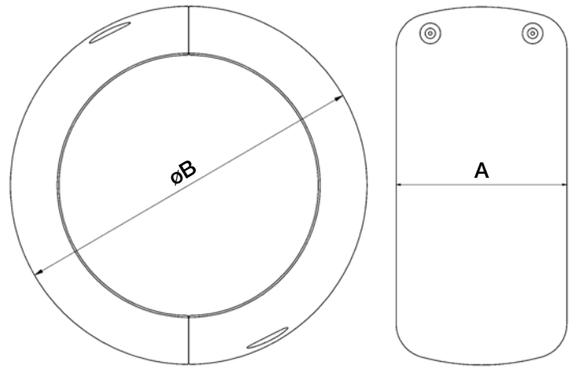

- Optional protectors can be fitted at contact points
- For extreme operations and long service life
- Easy gliding over edges
- Damping, light, freely positionable
- Easy to fit and quick replacement
- Protector with quick-release fastener also available

Protectors | For TRC·TRE·TRCF

TR.40.10 - TR.125.10

TR.40.30 - TR.100.30

Ø Index	Part No. with screw connection	Part No. with quick release	A [mm]	B [mm]
30.	TR.30.10	–	22	47
40.	TR.40.10	TR.40.30 2)	27	55
50.	TR.50.10	TR.50.30 2)	34	69
60.	TR.60.10	TR.60.30 2)	40	80
65.	TR.65.10	TR.65.30 2)	44	88
65. (*R 200*)	–	–	44	88
70.	TR.70.10	TR.70.30	50	102
85.	TR.85.10	TR.85.30	59	118
85. (*R 240*)	TR.85.240.10 4)	–	63	120
100.	TR.100.10	TR.100.30	67	133
125.	TR.125.10	–	82	170

2) Without additional securing clip - a safety clip is used from size 70

4) Only for special size with larger bend radius

5) Available upon request Delivery time upon request.

triflex® R accessories

Compact connections for clamp axis 6

Compact connection **with** strain relief
TR.40.21.01.XX - TR.100.21.01.XX

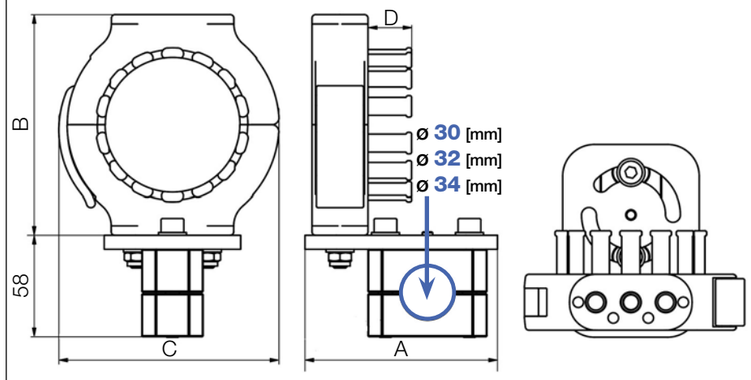

- With integrated strain relief tiewrap plates
- Safe and simple securing of the cables with cable ties
- Various adjustment options

Compact connections | **With** strain relief | For TRC·TRE·TRCF

TR.40.21.01.XX - TR.100.21.01.XX

Ø Index	Part No. with strain relief	Clamp ø [mm]	A [mm]	B [mm]	C [mm]	D [mm]
30.	–	–	–	–	–	–
40.	**TR.40.21.01.**	| **30** | **32** | **34** |	110	85	84.5	17.8
50.	**TR.50.21.01.**	| **30** | **32** | **34** |	110	85	84.5	21
60.	**TR.60.21.01.**	| **30** | **32** | **34** |	110	126	126	25
65.	**TR.65.21.01.**	| **30** | **32** | **34** |	110	126	126	25
65. (*R 200*)	**TR.65.200.21.01.** 4)	| **30** | **32** | **34** |	110	126	126	25
70.	**TR.70.21.01.**	| **30** | **32** | **34** |	110	126	126	25
85.	**TR.85.21.01.**	| **30** | **32** | **34** |	110	153	155	38
85. (*R 240*)	**TR.85.240.21.01.** 4)	| **30** | **32** | **34** |	110	153	155	38
100.	**TR.100.21.01.**	| **30** | **32** | **34** |	110	153	155	38
125.	–	–	–	–	–	–

Standard clamp for axis 6: ø 30mm

4) Only for special size with larger bend radius

Part No. with desired diameter for the axis 6 clamp | **30** | **32** | **34** | e.g. **TR.100.21.01.30**

triflex® R accessories

Compact connections for clamp axis 6

Compact connection **without** strain relief
TR.40.21.02.XX - TR.100.21.02.XX

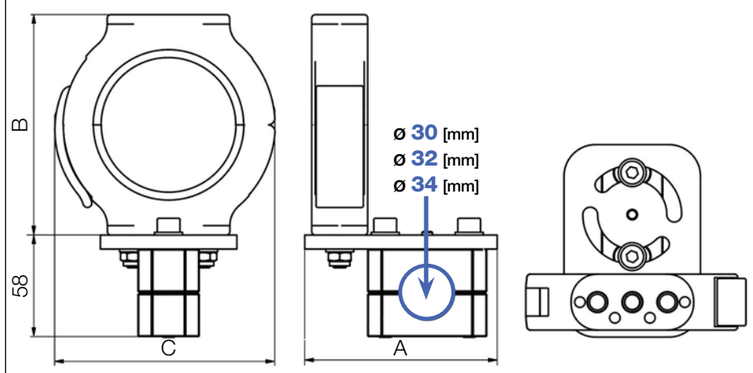

- Without strain relief
- Space-saving
- Various adjustment options

Compact connections | **Without** strain relief | For TRC·TRE·TRCF

TR.40.21.02.XX - TR.100.21.02.XX

Ø Index	Part No. without strain relief	Clamp ø [mm]	A [mm]	B [mm]	C [mm]	D [mm]
30.	–	–	–	–	–	–
40.	**TR.40.21.02.**	| **30** | **32** | **34** |	110	85	84.5	–
50.	**TR.50.21.02.**	| **30** | **32** | **34** |	110	85	84.5	–
60.	**TR.60.21.02.**	| **30** | **32** | **34** |	110	126	126	–
65.	**TR.65.21.02.**	| **30** | **32** | **34** |	110	126	126	–
65. (*R 200*)	**TR.65.200.21.02.** 4)	| **30** | **32** | **34** |	110	126	126	–
70.	**TR.70.21.02.**	| **30** | **32** | **34** |	110	126	126	–
85.	**TR.85.21.02.**	| **30** | **32** | **34** |	110	153	155	–
85. (*R 240*)	**TR.85.240.21.02.** 4)	| **30** | **32** | **34** |	110	153	155	–
100.	**TR.100.21.02.**	| **30** | **32** | **34** |	110	153	155	–
125.	–	–	–	–	–	–

Standard clamp for axis 6: ø 30mm

4) Only for special size with larger bend radius

Part No. with desired diameter for the axis 6 clamp | **30** | **32** | **34** | e.g. **TR.100.21.02.30**

triflex® R accessories

Compact connections for clamp axis 6

Compact connection **with** radius support and strain relief
TR.40.21.09.XX - TR.100.21.09.XX

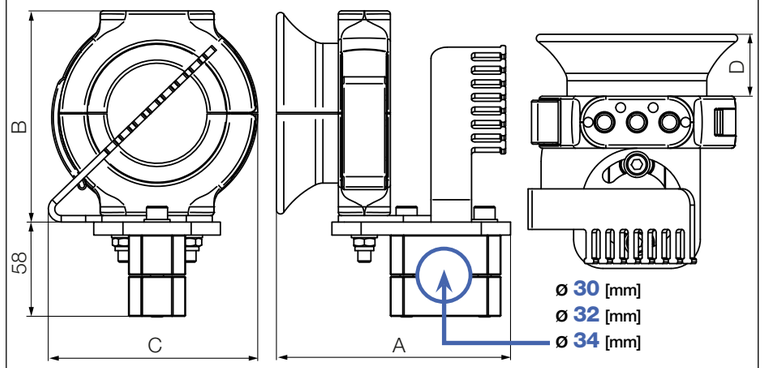

- With integrated strain relief tiewrap plates
- Radius support for higher operational reliability
- Safe and simple securing of the cables with cable ties
- Various adjustment options

Compact connection | **With** radius support and strain relief | For TRC·TRE·TRCF

TR.40.21.09.XX - TR.100.21.09.XX

Ø Index	Part No. with strain relief	Clamp ø [mm]	A [mm]	B [mm]	C [mm]	D [mm]
30.	–	–	–	–	–	–
40.	TR.40.21.09.	| 30 | 32 | 34 |	134	85	84	28
50.	TR.50.21.09.	| 30 | 32 | 34 |	144	85	84.5	38
60.	TR.60.21.09.	| 30 | 32 | 34 |	144	130	129	38
65.	TR.65.21.09.	| 30 | 32 | 34 |	151	130	130	45
65. (R 200)	–	–	–	–	–	–
70.	TR.70.21.09.	| 30 | 32 | 34 |	149	130	130	43
85.	TR.85.21.09.	| 30 | 32 | 34 |	157	157	155	49
85. (R 240)	–	–	–	–	–	–
100.	TR.100.21.09.	| 30 | 32 | 34 |	174	168	175	67
125.	–	–	–	–	–	–

Standard clamp for axis 6: ø 30mm

Part No. with desired diameter for the axis 6 clamp | 30 | 32 | 34 | e.g. TR.100.21.09.30

triflex® R accessories

Heavy duty connections, for axis 6

Heavy duty connection Standard
TR.60.20.XX - TR.125.20.XX

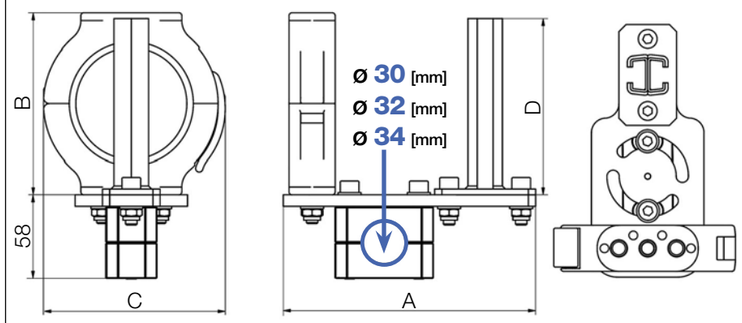

- Heavy-duty connection - standard
- For cables with large cross section
- For heavy hydraulic hoses
- Double C-profile for CFX clamps
- igus® chainfix clamps must be ordered separately

Heavy duty connections | For TRC·TRE·TRCF

TR.60.20.XX - TR.125.20.XX

Ø Index	Part No. Standard	Clamp ø [mm]	A [mm]	B [mm]	C [mm]	D [mm]	E [mm]
30.	–	–	–	–	–	–	–
40.	–	–	–	–	–	–	–
50.	–	–	–	–	–	–	–
60.	TR.60.20.	| 30 | 32 | 34 |	175	126	126	122	–
65.	TR.65.20.	| 30 | 32 | 34 |	175	126	126	122	–
65. (R 200)	TR.65.200.20. 4)	| 30 | 32 | 34 |	175	126	126	122	–
70.	TR.70.20.	| 30 | 32 | 34 |	175	126	126	122	–
85.	TR.85.20.	| 30 | 32 | 34 |	175	153	155	149	–
85. (R 240)	TR.85.240.20. 4)	| 30 | 32 | 34 |	175	153	155	149	–
100.	TR.100.20.	| 30 | 32 | 34 |	175	153	155	149	–
125.	TR.125.20.	| 30 | 32 | 34 |	180	190	190	175	–

Standard clamp for axis 6: ø 30mm

4) Only for special size with larger bend radius

Part No. with desired diameter for the axis 6 clamp | 30 | 32 | 34 | e.g. TR.100.20.30

triflex® R accessories

Quick exchange kit for clamp axis 6

Quick exchange kit
TR.60.22.XX - TR.100.22.XX

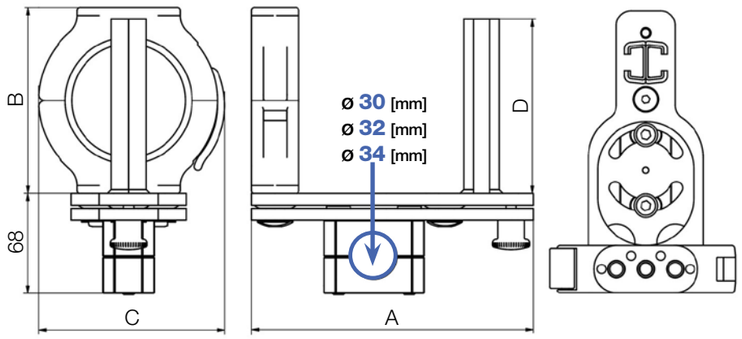

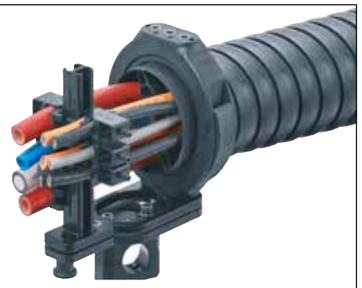

- Exchange in seconds
- No repeat alignment required
- Exchange the triflex® R unit incl. cables without tools
- Option available with strain relief

Quick exchange kit | For TRC·TRE·TRCF

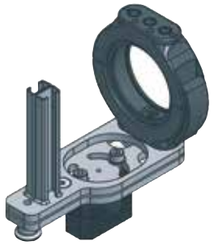

TR.60.22.XX - TR.100.22.XX

Ø Index	Part No. Quick exchange kit	Clamp ø [mm]	A [mm]	B [mm]	C [mm]	D [mm]
30.	–	–	–	–	–	–
40.	–	–	–	–	–	–
50.	–	–	–	–	–	–
60.	TR.60.22.	| 30 | 32 | 34 |	191	126	126	126
65.	TR.65.22.	| 30 | 32 | 34 |	191	126	126	126
65. (*R 200*)	TR.65.200.22. 4)	| 30 | 32 | 34 |	191	126	126	126
70.	TR.70.22.	| 30 | 32 | 34 |	191	126	126	126
85.	TR.85.22.	| 30 | 32 | 34 |	191	153	155	153
85. (*R 240*)	TR.85.240.22. 4)	| 30 | 32 | 34 |	191	153	155	153
100.	TR.100.22.	| 30 | 32 | 34 |	191	153	155	153
125.	–	–	–	–	–	–

Standard clamp for axis 6: ø 30mm

4) Only for special size with larger bend radius

Part No. with desired diameter for the axis 6 clamp | 30 | 32 | 34 | e.g. TR.100.22.30

triflex® R accessories

Heavy duty connections for axis 6, with radius support

Heavy duty connection - with radius support
TR.60.23.XX - TR.125.23.XX

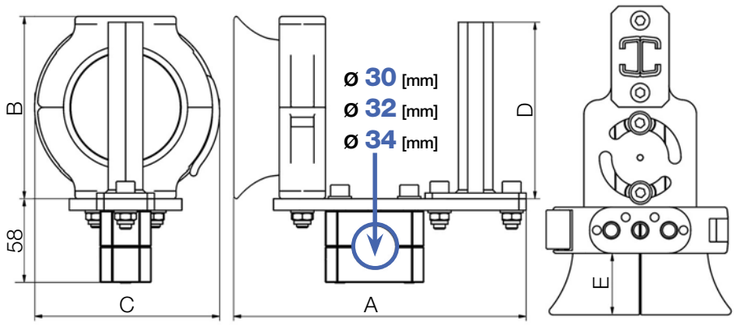

- With radius support
- For cables with large cross section
- For heavy hydraulic hoses
- Double C-profile for CFX clamps
- igus® chainfix clamps must be ordered separately

Heavy duty connections | With radius support | For TRC·TRE·TRCF

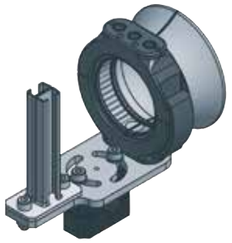

TR.60.23.XX - TR.125.23.XX

Ø Index	Part No. with radius support	Clamp ø [mm]	A [mm]	B [mm]	C [mm]	D [mm]	E [mm]
30.	–	–	–	–	–	–	–
40.	–	–	–	–	–	–	–
50.	–	–	–	–	–	–	–
60.	TR.60.23.	| 30 | 32 | 34 |	209	126	130	122	38
65.	TR.65.23.	| 30 | 32 | 34 |	214	126	130	122	45
65. (*R 200*)	–	–	–	–	–	–	–
70.	TR.70.23.	| 30 | 32 | 34 |	214	126	130	122	43
85.	TR.85.23.	| 30 | 32 | 34 |	222	155	155	149	49
85. (*R 240*)	–	–	–	155	–	149	–
100.	TR.100.23.	| 30 | 32 | 34 |	240	155	155	149	67
125.	TR.125.23.	| 30 | 32 | 34 |	252	190	190	175	72

Standard clamp for axis 6: ø 30mm

Part No. with desired diameter for the axis 6 clamp | 30 | 32 | 34 | e.g. TR.100.23.30

triflex® R accessories
chainfix clamps

chainfix | Single clamp incl. bottom saddles

- For use with heavy-duty connection **TR.XX.20** / **TR.XX.23** and quick release unit **TR.XX.22**
- Reliably absorbs tensile forces even for larger cable diameters
- Specifically recommended for solid welding cables and rigid hydraulic hoses
- Space- and time-saving assembly onto the C-profile
- Simple assembly with threaded pins screwed with an Allen wrench
- Durability for dynamic applications with improved stacker elements
- Integrated ribs on the stacker elements prevent the cables from coming loose from the strain relief
- Steel (material galvanised steel) or stainless steel (material 1.4301/AISI 304) available

Part No. Steel	Part No. stainless steel*	≤ Ø [mm]	B+2 [mm]	H [mm]
CFX12.1	CFX12.1.E	06 - 12	16	54
CFX14.1	CFX14.1.E	12 - 14	18	50
CFX16.1	CFX16.1.E	14 - 16	20	52
CFX18.1	CFX18.1.E	16 - 18	22	54
CFX20.1	CFX20.1.E	18 - 20	24	56

Part No. Steel	Part No. stainless steel*	≤ Ø [mm]	B+2 [mm]	H [mm]
CFX22.1	CFX22.1.E	20 - 22	26	58
CFX26.1	CFX26.1.E	22 - 26	30	67
CFX30.1	CFX30.1.E	26 - 30	34	71
CFX34.1	CFX34.1.E	30 - 34	38	75

*Stainless steel material: 1.4301/AISI 304

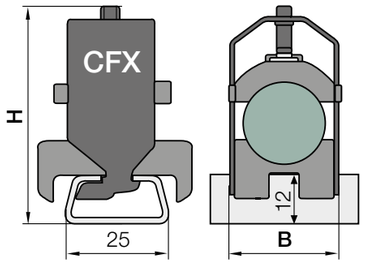

Pneumatic stacker saddles | For CFX and CFXL clamps

- Strain relief of pneumatic hoses without crushing or damage
- For pneumatic hose diameters of 4mm, 6mm, 8mm, 10mm and 12mm
- High holding force due to "all-round" grip
- The cross section of pneumatic hoses is fully retained
- No crushing of the hoses, and therefore no loss of hose length
- Coloured identification markings, inserts are blue
- Fast assembly without checking the tightening torque

Part No. CFX12	CDA.4 / 4-12.P	CDA.8 / 12.P	≤ Ø [mm]
CFX12.1.P4.1	2 x	–	04
CFX12.1.P8.1	–	2 x	08

Part No. CFX16	CDA.6 / 6-16.P	CDA.10-16.P	CDA.12-16.P	≤ Ø [mm]
CFX16.1.P6.1	2 x	–	–	06
CFX16.1.P10.1	–	2 x	–	10
CFX16.1.P12.1	–	–	2 x	12

Standard material: galvanised steel. For the stainless steel version (material 1.4301/AISI 304), please add the part number with index **.E**

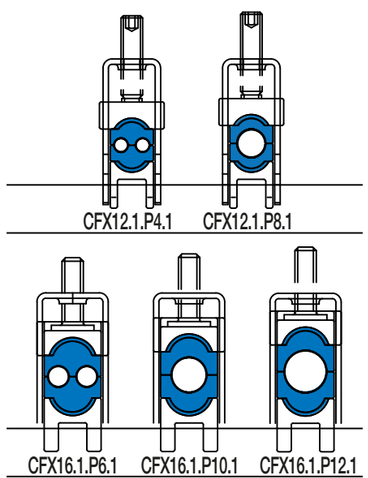

triflex® R accessories
Protective jackets

Standard protective jacket

● Plastic coated fabric ● Easy to replace with hook-and-loop fastenings ● Elastic sealing strips ● Standard lengths available from stock ● For paint or sealing applications ● Material: PVC

Ø Index	Part No. Jacket	Standard lengths* XXXX [mm]
30. ▶	–	–
40. ▶	TR.40.14.	| 500 | 1000 | 1500 | 2000 |
50. ▶	TR.50.14.	| 500 | 1000 | 1500 | 2000 |
60. ▶	TR.60.14.	| 500 | 1000 | 1500 | 2000 |
65. ▶	TR.65.14.	| 500 | 1000 | 1500 | 2000 |
70. ▶	TR.70.14.	| 500 | 1000 | 1500 | 2000 |
85. ▶	TR.85.14.	| 500 | 1000 | 1500 | 2000 |
100. ▶	TR.100.14.	| 500 | 1000 | 1500 | 2000 |
125. ▶	TR.125.14.	| 500 | 1000 | 1500 | 2000 |

* Special lengths upon request

Part No. with the desired standard value for the length **XXXX**

Example: **TR.60.14.500**

Heat shield protective jacket

● Made from heat-resistant, wear-resistant Kevlar ● Short-term protection against welding and metal spatter, temperatures up to +540°C ● High abrasion resistance ● Sealed design ● For tough environments ● Easy to replace or retrofit with zipper closure ● Hook-and-loop at each end ● Tough design ● Silicone-free ● Asbestos-free ● Standard lengths from stock

Ø Index	Part No. Jacket	Standard lengths* XXXX [mm]
30. ▶	–	–
40. ▶	TR.40.18.	| 500 | 1000 | 1500 | 2000 |
50. ▶	TR.50.18.	| 500 | 1000 | 1500 | 2000 |
60. ▶	TR.60.18.	| 500 | 1000 | 1500 | 2000 |
65. ▶	TR.65.18.	| 500 | 1000 | 1500 | 2000 |
70. ▶	TR.70.18.	| 500 | 1000 | 1500 | 2000 |
85. ▶	TR.85.18.	| 500 | 1000 | 1500 | 2000 |
100. ▶	TR.100.18.	| 500 | 1000 | 1500 | 2000 |
125. ▶	TR.125.18.	| 500 | 1000 | 1500 | 2000 |

* Special lengths upon request

Part No. with the desired standard value for the length **XXXX**.

Example: **TR.60.18.500**

Wear resistant protective jacket

● Extremely high abrasion resistance ● Black leather ● For use in temperatures from -40°C to +100°C ● Very flexible ● Easy to exchange or retrofit ● Silicone-free ● Asbestos-free ● Standard lengths from stock

Ø Index	Part No. Jacket	Standard lengths* XXXX [mm]
30. ▶	–	–
40. ▶	TR.40.19.	| 500 | 1000 | 1500 | 2000 |
50. ▶	TR.50.19.	| 500 | 1000 | 1500 | 2000 |
60. ▶	TR.60.19.	| 500 | 1000 | 1500 | 2000 |
65. ▶	TR.65.19.	| 500 | 1000 | 1500 | 2000 |
70. ▶	TR.70.19.	| 500 | 1000 | 1500 | 2000 |
85. ▶	TR.85.19.	| 500 | 1000 | 1500 | 2000 |
100. ▶	TR.100.19.	| 500 | 1000 | 1500 | 2000 |
125. ▶	TR.125.19.	| 500 | 1000 | 1500 | 2000 |

* Special lengths upon request

Part No. with the desired standard value for the length **XXXX**

Example: **TR.60.19.500**

triflex® R accessories

Cobot universal mounting brackets

Fast assembly: assembled or retrofitted in just a few steps

Various options: available in four versions

Silicone-free: suitable for automotive industry

Flexible: hook-and-loop strip adapt to any robot arm

Cost-effective, flexible and fast assembly - triflex® COB universal mounting brackets

For secure attachment of e-chains® or protective hoses to robots, users can now rely on the new Lean Robotics brackets from igus®. The universal mounting brackets with hook-and-loop strips are flexible and adapt to any robot arm. A slim design with rounded edges reduces the risk of injury if there is contact with the robot. The new Lean Robotics brackets are available in various designs and are suitable for use with the triflex® R TRC/TRE/TRL 30 and 40 series and for all commercially available protective hoses in various diameters.

- Compact, lightweight and smooth design
- For different robots arm diameters, universal applications
- Assembled and retrofitted in just a few steps
- Silicone-free, suitable for automotive industry
- Virtually no edges, so the risk of injury is minimised
- The standard universal mounting brackets ❶ are suitable for all sizes of the triflex® R e-chain® series TRC/TRE/TRL
- The standard universal mounting brackets with hook-and-loop strips and protector ❷ or mounting bracket ❸ are suitable for triflex® R e-chain® series TRC/TRE/TRL 30 and 40
- The standard universal mounting brackets with PMA Clip ❹ are suitable for nominal widths 17, 23, 29, 36 and 48mm
- Low-cost addition to the igus® cobot accessories range

triflex® R accessories

Cobot universal mounting brackets overview

			
❶ Standard for maximum adaptability	❷ With triflex® R protector	❸ With triflex® R mounting bracket and optional strain relief	❹ With PMA clip
Benefits: ● 1 x polymer bracket ● 1m hook-and-loop strip ● Most cost-effective clamp in the range ● Silicone-free ● Maximum freedom for cable management	**Benefits:** ● 1 x polymer bracket ● 1m hook-and-loop strip ● 1 x round protector size 40 ● Silicone-free	**Benefits:** ● 1 x polymer bracket ● 1m hook-and-loop strip ● 1 x lightweight mounting bracket size 30 or 40*, available with and without strain relief ● *Size 40, option with long or short strain relief teeth ● Silicone-free	**Benefits:** ● 1 x polymer bracket ● 1m hook-and-loop strip ● 1 x PMA clip ● Available in 5 sizes for corrugated hoses ● Silicone-free
Suitable for: triflex® R e-chain® series TRC/TRE/TRL	**Suitable for:** triflex® R e-chain® series TRC/TRE/TRL, size 40	**Suitable for:** triflex® R e-chain® series TRC/TRE/TRL, size 30 and 40	**Suitable for:** Corrugated tube systems with nominal width 17, 23, 29, 36 and 48mm
▶ Page 58	▶ Page 58	▶ Page 58	▶ Page 59

UNIVERSAL ROBOTS+ Certified

Test before you invest ...

Free cobot test sample box - filled with information and samples for universal brackets

Part No. MAT0074799

Product range
Cobot universal mounting brackets

Product range | ❶ Standard for maximum adaptability
Universal for diameters from 15 to 55mm

Product	Part No. mounting brackets	Size ø [mm]	Description
	TR.COB.01.00.0	15 - 55	Support + 1m hook-and-loop strip

Product range | ❷ With triflex® R protector
For triflex® R e-chain® series TRC/TRE/TRL, size 40

Product	Part No. mounting brackets	Index ø [mm]	Description
	TR.COB.01.40.30.0	40	Protector size 40 + support + 1m hook-and-loop strip + plastic screw + protector

Product range | ❸ With triflex® R mounting bracket and optional strain relief
For triflex® R e-chain® series TRC/TRE/TRL, size 30 and 40

Product	Part No. mounting brackets	Index ø [mm]	Description
	TR.COB.01.30.Z1.0	30	Lightweight mounting bracket, size 30 with short strain relief + support + 1m hook-and-loop strip
	TR.COB.01.40.Z1.0	40	Lightweight mounting bracket, size 40, with strain relief + support + 1m hook-and-loop strip + plastic screw TR AE
	TR.COB.01.40.Z2.0	40	Lightweight mounting bracket, size 40, with long strain relief + support + 1m hook-and-loop strip + plastic screw TR AE
	TR.COB.01.30.Z0.0	30	Lightweight mounting bracket, size 30, without strain relief + support + 1m hook-and-loop strip
	TR.COB.01.40.Z0.0	40	Lightweight mounting bracket, size 40, without strain relief + support + 1m hook-and-loop strip + plastic screw TR AE

Product range
Cobot universal mounting brackets

Overview triflex® R e-chains® | For TRC·TRE·TRL

Principle sketch	Part No. Series	*Bi1* [mm]	*Bi2* [mm]	*Ba* [mm]	*R* [mm]	*d1* [mm]	*d2* [mm]	Pitch [mm]	Links per m
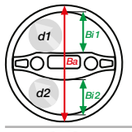	Series TRC - enclosed design								
	TRC.30.050.0	12	10	34.5	050	10	8	11.3	89
	TRC.40.058.0	15	13	43	058	13	11	13.9	72
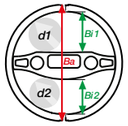	Series TRE - "easy" design								
	TRE.30.050.0	12	10	34.5	050	10	8	11.3	89
	TRE.40.058.0.B	15	13	43	058	13	11	13.9	72
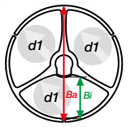	Series TRL - light version of the "easy"-design								
	TRL.30.050.0	12.5	11	34.5	050	10	8	11.3	89
	TRL.40.058.0	15	–	45	058	13	–	13.9	72

Product range | ❹ With PMA clip
Corrugated tube systems with nominal width 17, 23, 29, 36 and 48mm

Product	Part No. mounting brackets	NW [mm]	Description
	TR.COB.01.PMA.17.0	17	PMA clip, nominal width 17 + support + 1m hook-and-loop strip + plastic screw + protector
	TR.COB.01.PMA.23.0	23	PMA clip, nominal width 23 + support + 1m hook-and-loop strip + plastic screw + protector
	TR.COB.01.PMA.29.0	29	PMA clip, nominal width 29 + support + 1m hook-and-loop strip + plastic screw + protector
	TR.COB.01.PMA.36.0	36	PMA clip, nominal width 36 + support + 1m hook-and-loop strip + plastic screw + protector
	TR.COB.01.PMA.48.0	48	PMA clip, nominal width 48 + support + 1m hook-and-loop strip + plastic screw + protector

PMA hoses overview | For PMAFLEX corrugated tubes

Principle sketch	Part No. Series	Corrugated tube nominal width	Metric size [mm]	Inner Ø *d1* [mm]	Outer Ø *d2* [mm]	Static *R* [mm]*	Dynamic *R* [mm]**	VE [m]
	I-PIST-17B	17	20	16.4	21.1	30	65	50
	I-PIST-23B	23	25	22.6	28.4	35	90	50
	I-PIST-29B	29	32	29.0	34.3	45	110	50
	I-PIST-36B	36	40	36.5	42.5	60	180	50
	I-PIST-48B	48	50	46.7	54.2	70	200	50

*Static *R* = minimum recommended bend radius for static (fixed) installation

**Dynamic *R* = minimum recommended bend radius for dynamic (flexible) laying

triflex® R accessories

Cobot cable clip New

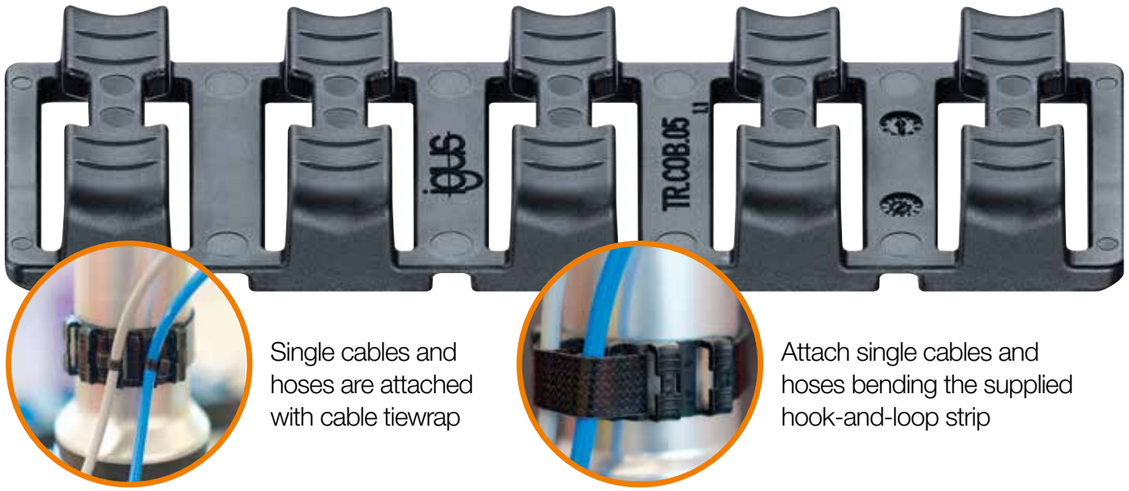

Single cables and hoses are attached with cable tiewrap

Attach single cables and hoses bending the supplied hook-and-loop strip

Quick, easy and universal cable attachment - triflex® COB cable clip

Cable clip for fast, easy attachment of cables and hoses to cobots or small robots. Made of flexible plastic, the cable clip adapts to any arm diameter of a cobot, robot or object. A silicone-free hook-and-loop strip is used for optimal attachment, which can be selected in 500mm and 1,000mm lengths and can be easily shortened with scissors.

- Compact, lightweight design
- For different robots arm diameters, universal applications
- Assembled and retrofitted in just a few steps
- Silicone-free, suitable for automotive industry
- Virtually no edges, so the risk of injury is minimised
- Cost-effective
- Space-saving by shortening the brackets
- Alternative to fastening with just cable ties

Product range | Cable clip

Part No. Universal cable clip	Description Product
TR.COB.05.0500	Cable clip + 500m hook-and-loop strip
TR.COB.05.1000	Cable clip + 1,000m hook-and-loop strip

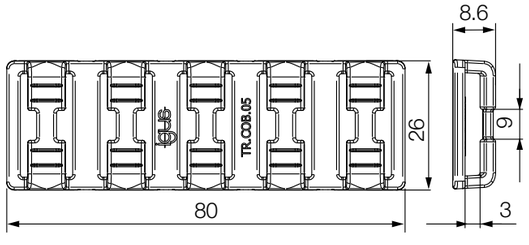

triflex® R accessories

Fibre-rod bracket for Universal Robots

Additional flexibility when routing the cables for Universal Robots - Bracket for fibre-rod system

The igus® bracket for the triflex® R fibre-rod system of sizes 30 and 40 enables virtually contact-free management of cables on Universal Robots.

- Easy retrofitting of cables and hoses
- Strong, defined cable management up to the tool
- Can be combined with our cobot mounting brackets
- Plug and play for UR10 + UR10e
- Minimisation of looping by holding the e-chain® above the axis 4-6
- Elongated holes allow custom, infinite fibre-rod module adjustment
- Get a complete solution in just 8 clicks using our online tool ▶ **www.igus.eu/quickrobot**

Product range | Suitable for TRE.30 fibre-rod systems

Part No. Fibre-rod bracket	For UR- robot system	Ø [mm]
TR.920.166.075	UR5 / UR5e	75
TR.920.166.086	UR10 / UR10e	86

Product range | Suitable for TRE.40 and TRC.40 fibre-rod systems

Part No. Fibre-rod bracket	For UR- robot system	Ø [mm]
TR.917.924	UR10 / UR10e	86

triflex® R accessories

UR metal mounting brackets

Video available online at ▶ www.igus.eu/UR_video

Mounting brackets for "Universal Robots" - UR brackets

The "Universal Robots" company makes easy-to-use, lightweight robot systems. The triflex® R 30 and 40 sizes are a perfect fit for UR3, UR5, UR10, UR3e, UR5e, UR10e and UR16e robot systems, both technically and aesthetically. Connecting the system is quick and easy when using the UR brackets.

- Safe cable management with triflex® R for "universal robots"
- Easy connection with screw clips
- For TRC,TRE, TRL: Ø 30 and 40mm
- Suitable for PMA corrugated tube I-PIST-29B (optional)

Overview triflex® R e-chains® | For TRC·TRE·TRL

Principle sketch	Part No. Series	*Bi1* [mm]	*Bi2* [mm]	*Ba* [mm]	*R* [mm]	*d1* [mm]	*d2* [mm]	Pitch [mm]	Links per m
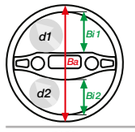	Series TRC - enclosed design								
	TRC.30.050.0	12	10	34.5	050	10	8	11.3	89
	TRC.40.058.0	15	13	43	058	13	11	13.9	72
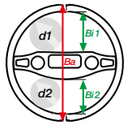	Series TRE - "easy" design								
	TRE.30.050.0	12	10	34.5	050	10	8	11.3	89
	TRE.40.058.0.B	15	13	43	058	13	11	13.9	72
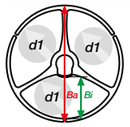	Series TRL - light version of the "easy"-design								
	TRL.30.050.0	12.5	11	34.5	050	10	8	11.3	89
	TRL.40.058.0	15	–	45	058	13	–	13.9	72

PMA hoses overview | For PMAFLEX corrugated tubes

Principle sketch	Part No. Series	Corrugated tube nominal width	Metric size [mm]	Inner Ø *d1* [mm]	Outer Ø *d2* [mm]	Static *R* [mm]*	Dynamic *R* [mm]**	VE [m]
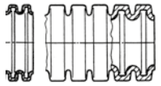	I-PIST-29B	29	32	29.0	34.3	45	110	50

*Static *R* = minimum recommended bend radius for static (fixed) installation **Dynamic *R* = minimum recommended bend radius for dynamic (flexible) laying

Product range

UR mounting brackets

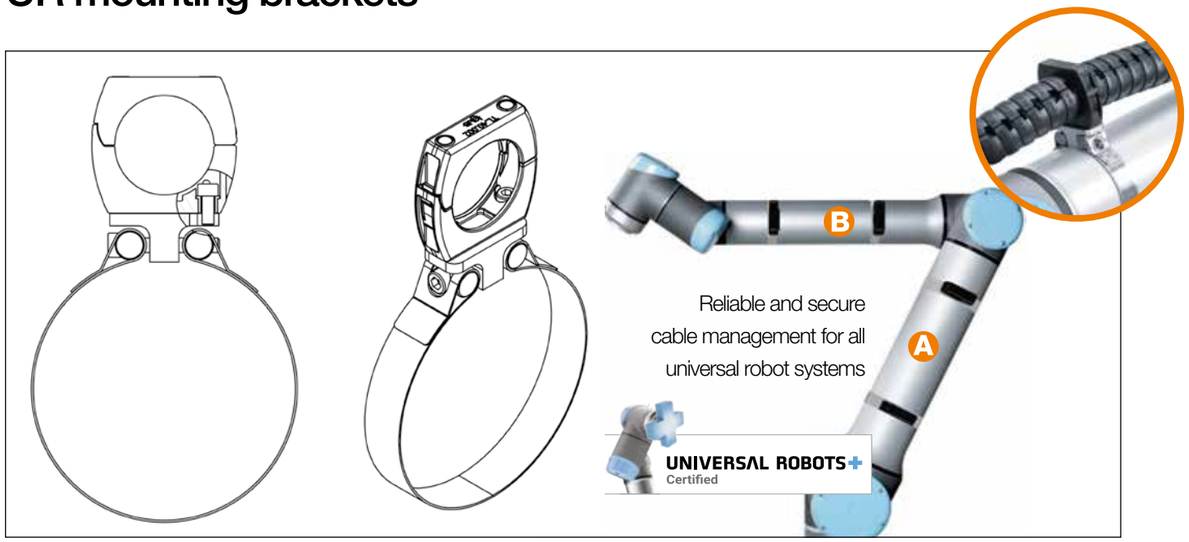

Product range | Suitable for TRC.30 · TRE.30 · TRL.30 e-chains®

Part No. **without** strain relief	Part No. **with** strain relief	For UR-robot system	Ø [mm]	Position
TR.911.965.054.Z0	TR.911.965.054.Z1	UR3 / UR3e	054	B
TR.911.965.066.Z0	TR.911.965.066.Z1	UR3 / UR3e	066	A
TR.911.965.075.Z0	TR.911.965.075.Z1	UR5 / UR5e	075	B
TR.911.965.086.Z0	TR.911.965.086.Z1	UR5 / UR5e	086	A
TR.911.965.086.Z0	TR.911.965.086.Z1	UR10 / UR10e	086	B
TR.911.965.108.Z0	TR.911.965.108.Z1	UR10 / UR10e	108	A

Product range | Suitable for TRC.40 · TRE.40 · TRL.40 e-chains®

Part No. **without** strain relief	Part No. **with** strain relief	For UR-robot system	Ø [mm]	Position
TR.911.966.054.Z0	TR.911.966.054.Z1	UR3 / UR3e	054	B
TR.911.966.066.Z0	TR.911.966.066.Z1	UR3 / UR3e	066	A
TR.911.966.075.Z0	TR.911.966.075.Z1	UR5 / UR5e	075	B
TR.911.966.086.Z0	TR.911.966.086.Z1	UR5 / UR5e	086	A
TR.911.966.086.Z0	TR.911.966.086.Z1	UR10 / UR10e	086	B
TR.911.966.108.Z0	TR.911.966.108.Z1	UR10 / UR10e / UR16e	108	A

Product range | Suitable for PMA hose I-PIST-29B (optional)

For PMA hose I-PIST-29B	Part No. **without** strain relief	For UR-robot system	Ø [mm]	Position
	TR.914.836.054.Z0	UR3 / UR3e	054	B
	TR.914.836.066.Z0	UR3 / UR3e	066	A
	TR.914.836.075.Z0	UR5 / UR5e	075	B
	TR.914.836.086.Z0	UR5 / UR5e	086	A
	TR.914.836.086.Z0	UR10 / UR10e	086	B
	TR.914.836.108.Z0	UR10 / UR10e / UR16e	108	A

triflex® R accessories

Mounting brackets for KUKA LBR iiwa

Mounting bracket for KUKA LBR iiwa

- Safe cable guidance with triflex® R for KUKA LBR iiwa robots
- For KUKA LBR iiwa 14 R820 and KUKA LBR iiwa 7 R800
- Easy connection with screw clips
- For 2 triflex® R sizes: Ø 30 and 40
- For TRC, TRE and TRL e-chains®

Overview triflex® R e-chains® | For TRC·TRE·TRL

Principle sketch	Part No. Series	*Bi1* [mm]	*Bi2* [mm]	*Ba* [mm]	*R* [mm]	*d1* [mm]	*d2* [mm]	Pitch [mm]	Links per m
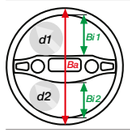	Series TRC - enclosed design								
	TRC.30.050.0	12	10	34.5	050	10	8	11.3	89
	TRC.40.058.0	15	13	43	058	13	11	13.9	72
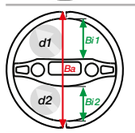	Series TRE - "easy" design								
	TRE.30.050.0	12	10	34.5	050	10	8	11.3	89
	TRE.40.058.0.B	15	13	43	058	13	11	13.9	72
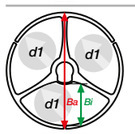	Series TRL - light version of the "easy"-design								
	TRL.30.050.0	12.5	11	34.5	050	10	8	11.3	89
	TRL.40.058.0	15	–	45	058	13	–	13.9	72

Product range

Mounting brackets for KUKA LBR iiwa

Product range | Suitable for TRC.30 · TRE.30 · TRL.30 e-chains®

Part No. **without** strain relief	Part No. **with** strain relief	For KUKA LBR iiwa	Ø [mm]
TR.914.951.Z0	TR.914.951.Z1	LBR iiwa 14 R820 LBR iiwa 7 R800	136

Product range | Suitable for TRC.40 · TRE.40 · TRL.40 e-chains®

Part No. **without** strain relief	Part No. **with** strain relief	For KUKA LBR iiwa	Ø [mm]
TR.914.952.Z0	TR.914.952.Z1	LBR iiwa 14 R820 LBR iiwa 7 R800	136

triflex® R accessories

Cobot mounting brackets

triflex® R clip protector

Bracket for triflex® R Ø 40 with quick release

Suitable for highly flexible PMA corrugated tubes (optional)

For UR3, UR5, UR10, UR3e, UR5e and UR10e robots

Certified by UNIVERSAL ROBOTS+ Certified

For robot arms with human-robot collaboration - HRC clamps

Moving energy for cobots made easy. Energy can be supplied safely along all axes thanks to clamping ring for the triflex® R e-chains® of our robots, also for collaborative robots.

- Plastic bracket
- Simple screw connection for attachment to the robot arm
- Bracket for triflex® R Ø 40 with quick release
- Rounded MRK design
- For TRC, TRE and TRL e-chains®
- For UR and URe robot arms

Overview triflex® R e-chains® | For TRC·TRE·TRL

Principle sketch	Part No. Series	Bi1 [mm]	Bi2 [mm]	Ba [mm]	R [mm]	d1 [mm]	d2 [mm]	Pitch [mm]	Links per m
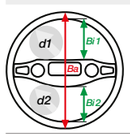	Series TRC - enclosed design								
	TRC.40.058.0	15	13	43	058	13	11	13.9	72
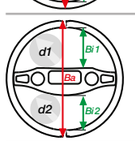	Series TRE - "easy" design								
	TRE.40.058.0.B	15	13	43	058	13	11	13.9	72
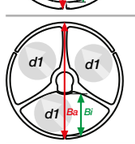	Series TRL - light version of the "easy"-design								
	TRL.40.058.0	15	–	45	058	13	–	13.9	72

PMA hoses overview | For PMAFLEX corrugated tubes

Principle sketch	Part No. Series	Corrugated tube nominal width	Metric size [mm]	Inner Ø d1 [mm]	Outer Ø d2 [mm]	Static R [mm]*	Dynamic R [mm]**	VE [m]
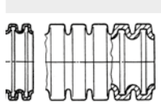	I-PIST-29B	29	32	29.0	34.3	45	110	50

*Static R = minimum recommended bend radius for static (fixed) installation **Dynamic R = minimum recommended bend radius for dynamic (flexible) laying

Product range

Cobot mounting brackets

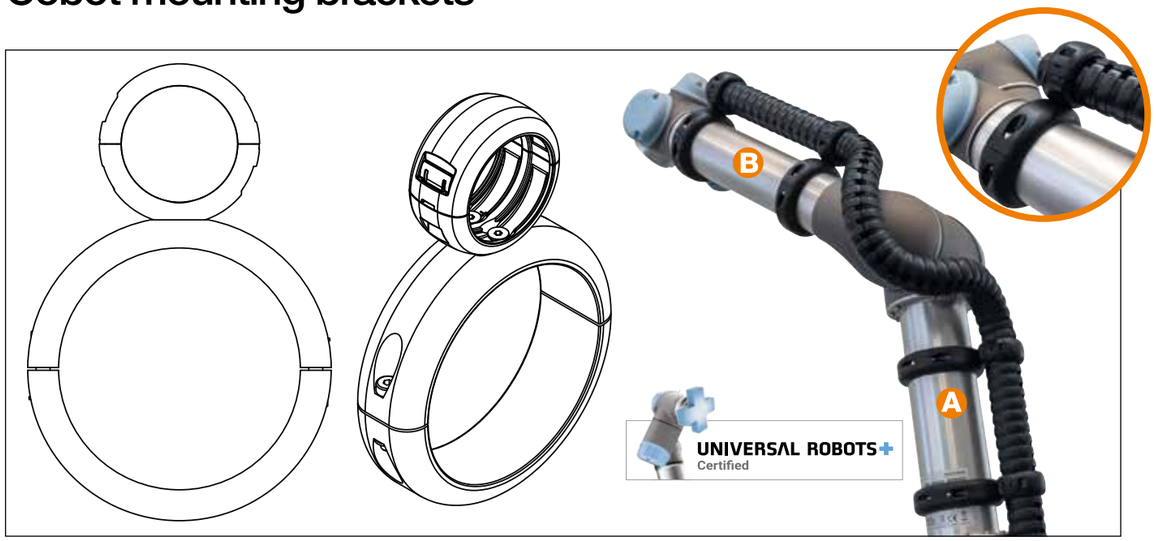

Product range | Suitable for TRC.40 · TRE.40 · TRL.40 e-chains®

Part No. Cobot mounting brackets	For UR-robot system	UR Ø [mm]	URe Ø [mm]	Position
TR.916.810.54	UR3 / UR3e	054	054	B
TR.916.810.66	UR3 / UR3e	066	066	A
TR.916.810.75	UR5 / UR5e	075	075	B
TR.916.810.86	UR5 / UR5e	086	086	A
TR.916.810.86	UR10 / UR10e	086	086	B
TR.916.810.108	UR10	108	–	A
TR.916.810.110	UR10e	–	110	A

Product range | Suitable for PMA hose I-PIST-29B (optional)

For PMA hose I-PIST-29B	Part No. Cobot mounting brackets	For UR-robot system	UR Ø [mm]	URe Ø [mm]	Position
	TR.916.810.54	UR3 / UR3e	054	054	B
	TR.916.810.66	UR3 / UR3e	066	066	A
	TR.916.810.75	UR5 / UR5e	075	075	B
	TR.916.810.86	UR5 / UR5e	086	086	A
	TR.916.810.86	UR10 / UR10e	086	086	B
	TR.916.810.108	UR10	108	–	A
	TR.916.810.110	UR10e	–	110	A

triflex® R accessories

SCARA Cable Solution (SCS) New

Modular system, easy to retrofit

Safe guidance of cables and hoses

The e-rib is clipped onto the corrugated tube and stabilises it in such a way that it can only move in one direction

Easy maintenance

All components are individually replaceable

Can be delivered as harnessed system

Custom design for easy adjustment to different SCARA types

Durable energy supply for SCARA robots

igus® has developed the SCARA Cable Solution (SCS) to route cables safely on SCARAs. The combination of a reinforced corrugated tube with the e-rib and the pivoted connections enables a process-reliable energy supply. The e-rib fills the joints of the corrugated hose to stabilise it in such a way that it can only move in one direction. The pivoted connections can either be attached directly to the ball screw (moving end) or with the help of an M40 screwed connection (fixed end). This solution will be available in nominal width 29 as standard.

- Safe guidance of cables and hoses on SCARA robots
- Quick, simple assembly
- Individually adaptable for different Scara models
- Includes the energy supply system from axis 1 or 2 to the ball screw
- Inner diameter nominal width 29 of the SCARA Cable Solution connection 21mm
- Nominal width 36 available upon request

Product range | Reinforced corrugated tube with pre-assembled e-rib | Nominal width 29

Part No. reinforced corrugated tube	Standard lengths* LLLL [mm]
TR.SCS.29.LLLL.0	1000 | 1100 | 1300 | 1400 | 1500 | 2000 | (*special lengths upon request)

Part No. with the desired standard value for the length LLLL. Example: TR.SCS.29.2000.0

Product range

Energy supply on the SCARA robot

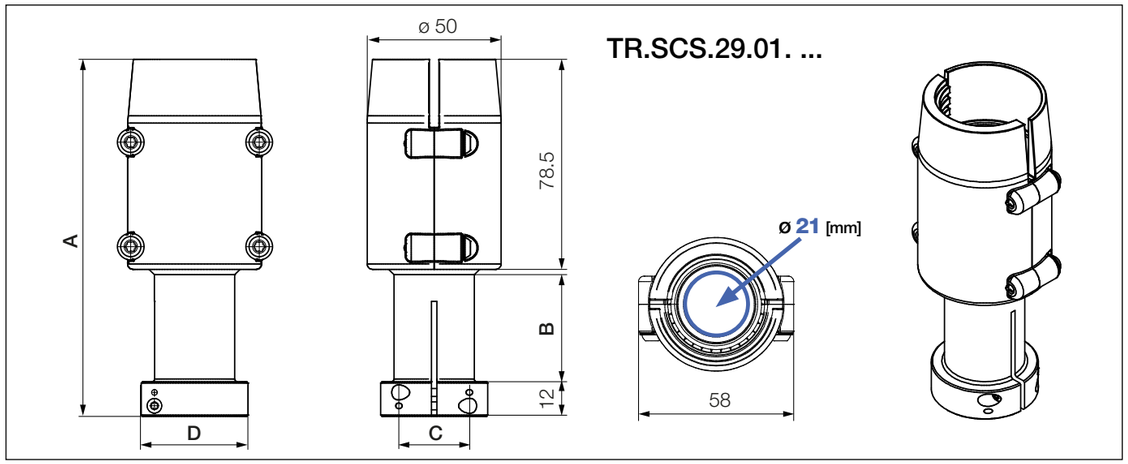

Product range | Moving end attachment

Part No. SCARA connection	A [mm]	B [mm]	C Ø [mm]	D Ø [mm]
TR.SCS.29.01.16.48.01.0	140.5	48	16	36
TR.SCS.29.01.16.97.01.0	189.5	97	16	36
TR.SCS.29.01.20.40.01.0	133.5	40	20	40
TR.SCS.29.01.20.94.01.0	187.5	94	20	40
TR.SCS.29.01.25.35.01.0	127.5	35	25	41
TR.SCS.29.01.25.48.01.0	140.5	48	25	41

Product range | Fixed end attachment, pivoting | M40 screwed connection

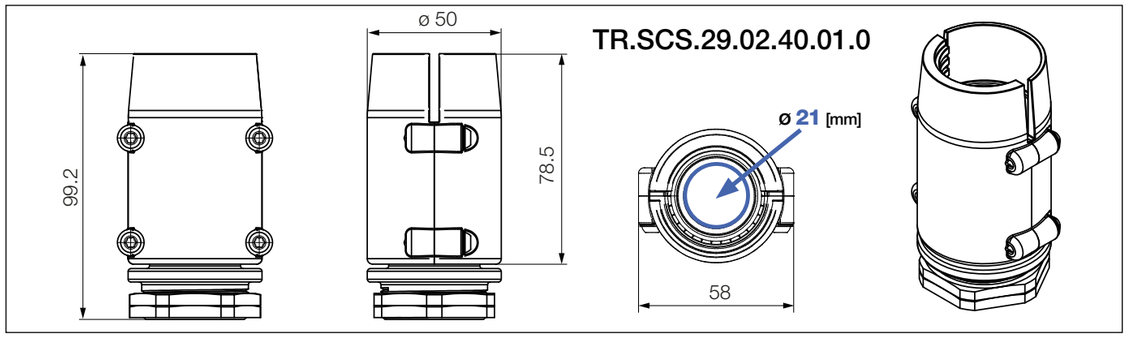

Product range | Fixed end attachment, locking | M40 screwed connection

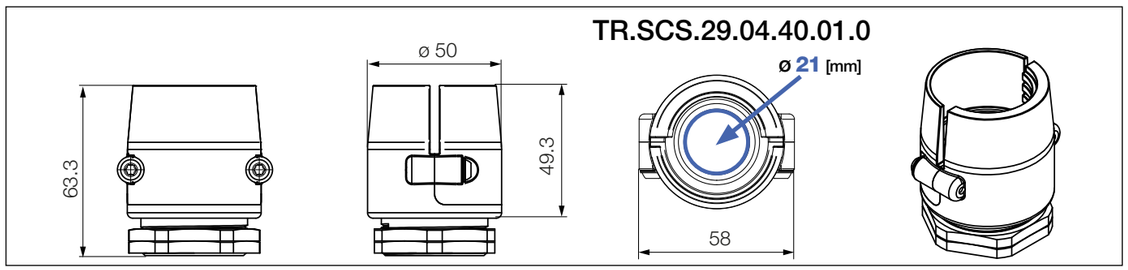

triflex® R retraction systems

For supplying energy to articulated robots

The picture above shows the cost-effective RSEL retraction system

Prevent loop formation on robots - triflex® R retraction systems

The global growth in automation for industrial production is leading to more and more complex robotic applications. Target cycle times are getting shorter and downtime must also be reduced. To provide reliable protection against premature system failure and downtime, we recommend the use of a triflex® R e-chain® especially to bridge the last three axes on robots. The length change that results from the robot's movement is compensated by our triflex® R retraction systems. This constantly guides the igus® e-chain® in a controlled way to prevent the formation of loops in the robot's working area.

5 triflex® R retraction system types available from stock:

- **RS** Modular retraction system
- **RSP** Pneumatic retraction system
- **RSE** Cost-effective retraction system with deflection
- **RSE·RSEC linear** Compact retraction system, linear
- **RSEL·RSSL** Cost-effective retraction system, linear

Typical industries and applications

● Machine tools ● Handling machines - 6-axis ● Conveyor systems ● Packaging machines ● General mechanical engineering, etc.

Available from stock. Ready to ship in 24 - 48hrs.*

*Average time before the ordered goods are dispatched.

triflex® R retraction systems

System overview and advantages

RS modular retraction system
▶ From page 74

Benefits:
- For use with adverse environmental influences
- Retraction force provided by integrated fibre-rods
- For robots with a load capacity from approx. 10kg
- Up to 670mm retraction length
- If a linear guide system is not needed
- For series TRC·TRE with ø index 40-100mm

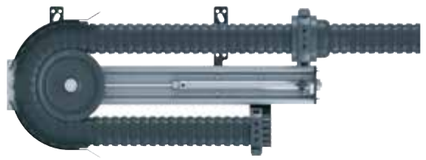

RSP pneumatic retraction system
▶ From page 82

Benefits:
- Standard pneumatic components
- For a sensor-based monitoring
- For applications with a high fill weight
- Constant force over the complete travel
- For robots with a load capacity of approx. 50kg
- Up to 780mm retraction length
- For series TRC·TRE·TRCF with ø index of 60-125mm

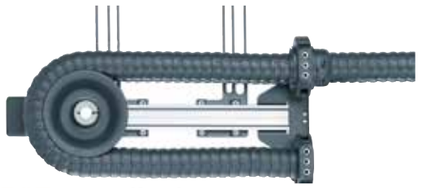

RSE cost-effective retraction system with deflection
▶ From page 90

Benefits:
- For small robots, very light
- Up to 500mm retraction length
- For highly dynamic movements
- Cost-effective
- Maintenance-free igus® drylin® W linear unit
- For series TRC·TRE with ø index 40-50mm

RSE·RSEC linear compact retraction system
▶ From page 98

Benefits:
- Special linear guide with no small bend radii
- Simple, linear retraction without sags, fibre rods, or guide rollers
- Up to 490mm retraction length
- Space-saving
- Maintenance-free igus® drylin® W linear unit
- For series TRC·TRE·TRCF with ø index 40-100mm

RSEL·RSSL cost-effective retraction system, linear
▶ From page 108

Benefits:
- Linear guidance even for highly dynamic applications
- For robots with high and medium payloads
- Up to 380mm retraction length possible
- Cost-effective
- For series TRC·TRE·TRCF with ø index of 60-100mm

triflex® R retraction systems

Choosing the right e-chain® size ...

1

Largest single cable diameter ø ...

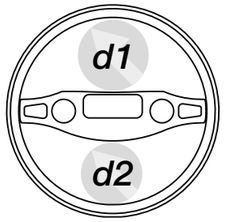

2

... and max. usable e-chain® cross section area ...

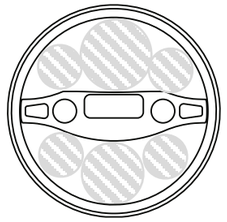

3

... determine the necessary Ø index of the triflex® R ...

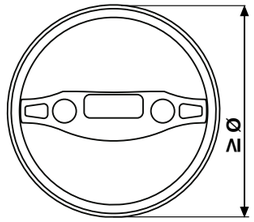

4

... select from 5 retraction systems options:

Max. cable Ø 1. chamber *d1* [mm]	Max. cable Ø 2. chamber *d2* [mm]	Coverage of the entire area [mm²]	Minimum Ø index triflex® R e-chain®	RS modular	RSP pneumatic	RSE with deflection	RSE·RSEC linear space-saving	RSEL·RSSL cost-effective
–	–	–	30.	–	–	–	–	–
< 15	< 13	< 500	40.	●	–	●	●	–
< 18.8	< 16.2	< 750	50.	–	–	●	●	–
< 22.5	< 19.5	< 1,000	60.	●	●	–	●	●
–	–	–	65.	–	–	–	–	–
< 28	< 24	< 1,750	70.	●	●	–	●	●
< 33	< 28	< 2,500	85.	●	●	–	●	●
< 37.5	< 32.5	< 3,000	100.	●	●	–	●	●
< 43	< 43	< 4,500	125.	–	●	–	–	–
				▶ Page 74	▶ Page 82	▶ Page 90	▶ Page 98	▶ Page 108

● = yes, it is possible - = it is not possible

If you want to select a suitable retraction system yourself, please ensure that you observe the maximum cable diameter and usage data.

Possible Ø index for triflex® R retraction systems

For series	RS ø index	RSP ø index	RSE ø index	RSE·RSEC linear ø index	RSEL·RSSL ø index
TRC	40 - 100	60 - 125	40 - 50	40 - 100	60 - 100
TRE	40 - 100	60 - 125	40 - 50	40 - 100	60 - 100
TRCF	–	65 - 100	–	65 - 100	65 - 100
TRL*	–	–	–	–	–
TRLF*	–	–	–	–	–

*Retraction systems not available for this series

Selection tool for triflex® R retraction systems with deflection

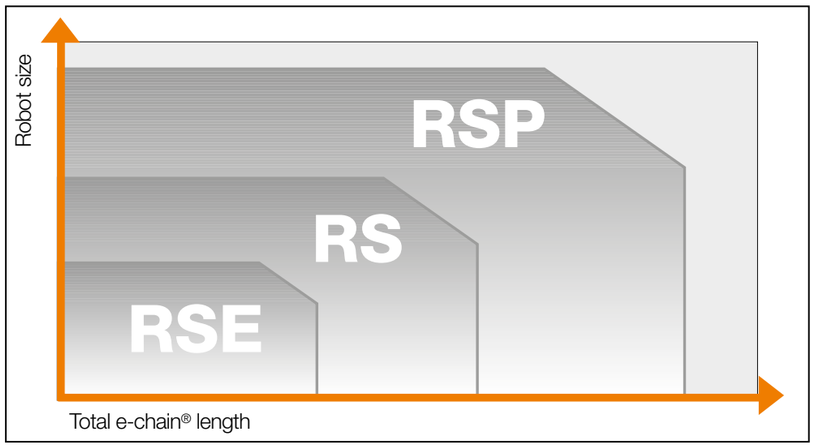

RS retraction system

Modular retraction system

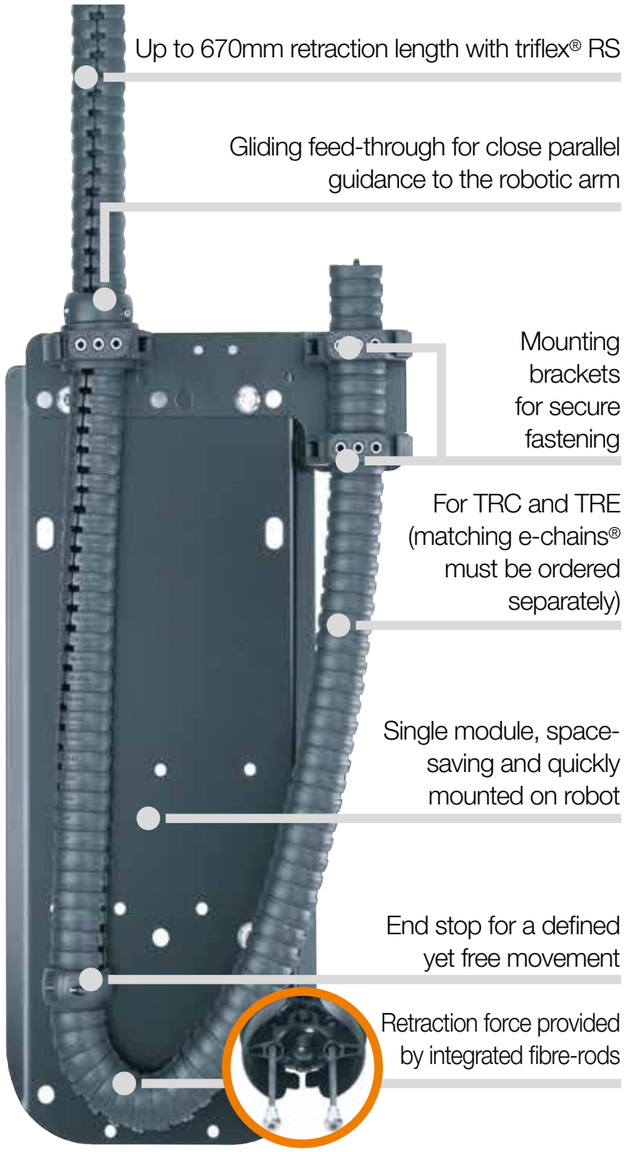

Modular retraction system - triflex® RS

triflex® RS is a retraction system for robots with medium to high payloads. With triflex® RS, the multi-axis triflex® R e-chain® is routed parallel to the robot arm. Integrated fibre rods produce a directed pretension, avoiding the formation of loops in the working area of the robot head. This also allows applications to be implemented in very limited space. triflex® RS offers safe energy supply for tools without stressing the cables, thus minimising downtimes.

- Space-saving, closely routed on the robot arm
- A system solution proven and tested in thousands of applications
- Universal installation
- Integrated fibre-rods - no external mechanical components such as springs or steel cables required.

Video online
► www.igus.eu/RS_movie

Assembly video online:
Please scan the QR code or visit
► www.igus.eu/assembly-RS-system

RS applications

RS - R(etraction) S(ystem)

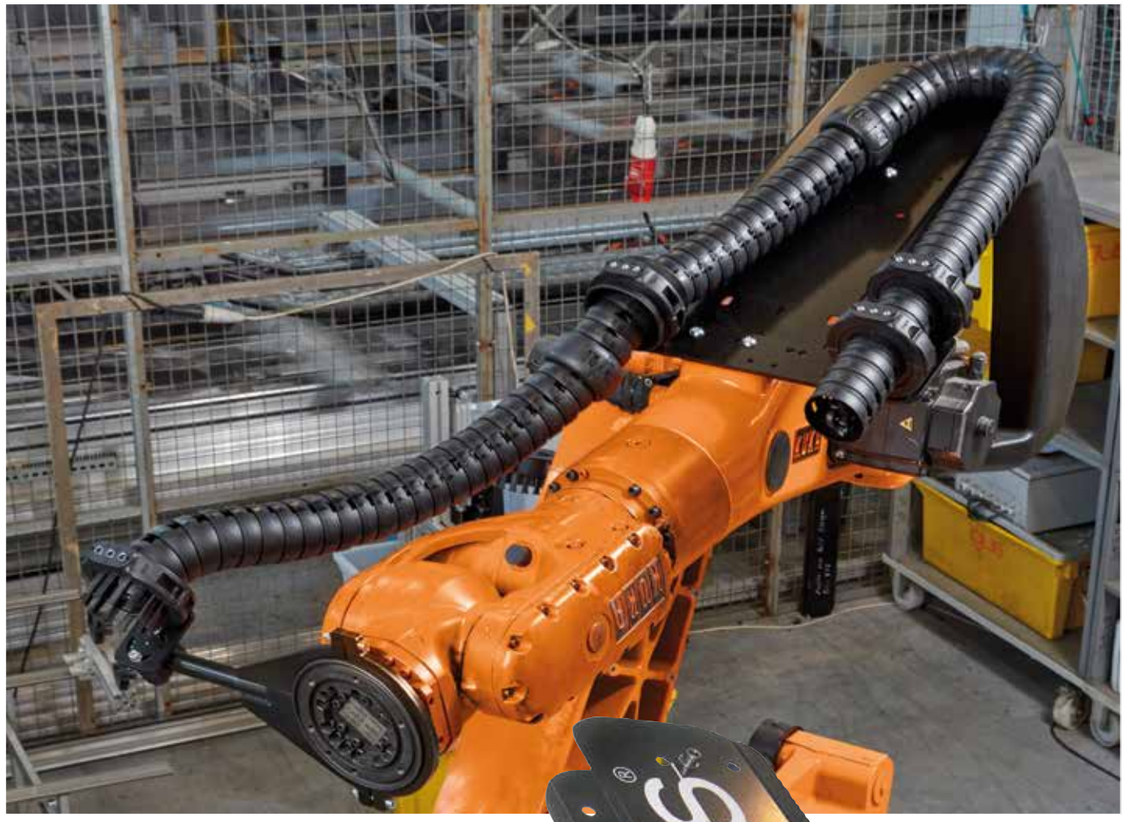

triflex® RS for a low profile retraction system. With triflex® RS, the multi-axis triflex® R e-chain® is routed parallel to the robot arm

Option: triflex® RS with cover for more mounting space

RS retraction system

System design with matching e-chains®

Optional cover for additional installation space on the robot: **TR.RS.XX.COVER**

Matching triflex® R e-chains® for RS with integrated fibre-rods
TRC.RS.XX.*R*.LLLL.0
TRE.RS.XX.*R*.LLLL.0.B

RSE linear system (without e-chain®) **+**
Support plate **+**
Mounting bracket **+**
Gliding feed-through **=**
TR.RS.XX.L or **TR.RS.XX.R**

e-chain® overall length =
additional length from the gliding feed-through **LLLL +**
the e-chain® length within the system

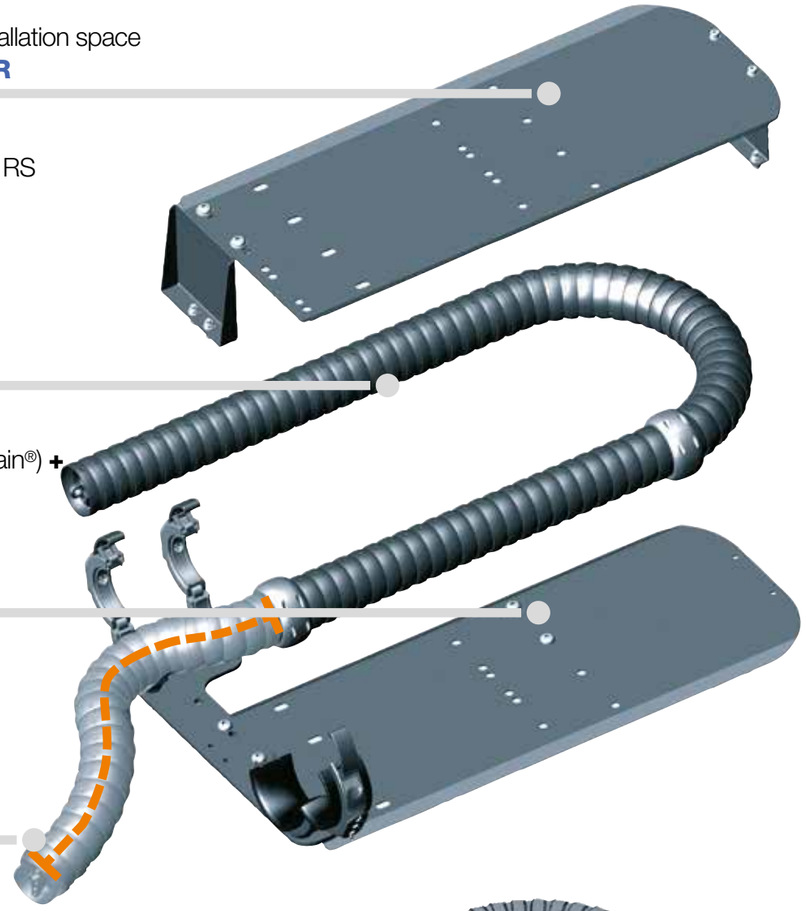

Complete RS modular retraction system with fixed end on the left and TRE triflex® R series. Mounting bracket and gliding feed-through are included. Please order matching triflex® R e-chain® and optional cover separately.

RS retraction system

Sample order of a retraction system including e-chain®

Sample order of a complete TR.RS system, ø index 60, fixed end on the left, including cover and e-chain® (standard length: 500mm)

System	Insert Ø index / select fixed end **.L / .R**	**TR.RS.60.L**
+ Cover	Insert Ø index (cover optional)	**TR.RS.60.COVER**
+ e-chain®	Insert ø index / Insert bend radius ***R*** / Insert standard length **LLLL**	**TRC.RS.60.087.0500.0**
Order text:	**TR.RS.60.L + TR.RS.60.COVER + TRC.RS.60.087.0500.0**	

Retraction system order key

TR.RS.60.L
TR.RS.60.R

- **L** = Fixed end right or
- **R** = Fixed end left
- ø index
- Retraction system
- Series

e-chains® order key

TRC.RS.60.087.0500.0
TRE.RS.60.087.0500.0.B

- Default colour black
- **LLLL** = Additional length
- ***R*** Bend radius
- ø index
- Retraction system
- e-chains® series

Optional accessories | RS modular retraction system

Cover
for additional installation space and complex movements
▶ Page 78

Adjustment unit
for accurate adjustment of the system position
▶ Page 122

Adapter consoles
for custom mounting options
▶ Page 123

Axis 6 clamp
for triflex® R mounting bracket
▶ Page 126

RS retraction system

Product range

Optional cover for additional installation space

Product range | RS modular retraction system

Ø Index	Part No. fixed end **left**	Part No. fixed end **right**	Retraction length[1] ≤ [mm]	A [mm]	B [mm]	C [mm]	D [mm]	Weight [kg]
30.	–	–	–	–	–	–	–	–
40.	TR.RS.40.L	TR.RS.40.R	460	576	301	95	51	3.5
50.	TR.RS.50.L	TR.RS.50.R	460	625	421	103	100	3.9
60.	TR.RS.60.L	TR.RS.60.R	550	900	528	150	65	8.7
65.	–	–	–	–	–	–	–	–
65. (*R 200*)	–	–	–	–	–	–	–	–
70.	TR.RS.70.L	TR.RS.70.R	620	900	545	167	65	9.2
85.	TR.RS.85.L	TR.RS.85.R	670	900	565	167	65	9.5
85. (*R 240*)	–	–	–	–	–	–	–	–
100.	TR.RS.100.L	TR.RS.100.R	580	938	614	167	108	11.5
125.	–	–	–	–	–	–	–	–

Please order matching triflex® R e-chain® separately. 1) Max. retraction length.

Product range | Cover, optional

Ø Index	Optional cover retrofit kit	A [mm]	B [mm]	C [mm]	D [mm]	Load* ≤ [kg]	Weight [kg]
30.	–	–	–	–	–	–	–
40.	TR.RS.40.COVER	101.7	550	567.5	244.6	1.5	2.6
50.	TR.RS.50.COVER	101.7	550	567.5	244.6	1.5	2.6
60.	TR.RS.60.COVER	170.7	850	880	344.6	3.5	7.2
65.	–	–	–	–	–	–	–
65. (*R 200*)	–	–	–	–	–	–	–
70.	TR.RS.70.COVER	170.7	850	880	344.6	3.5	7.2
85.	TR.RS.85.COVER	170.7	850	880	344.6	3.5	7.2
85. (*R 240*)	–	–	–	–	–	–	–
100.	TR.RS.100.COVER	172	853	910.5	397.6	3.5	7.1
125.	–	–	–	–	–	–	–

*Maximum fill weight to be used with the cover

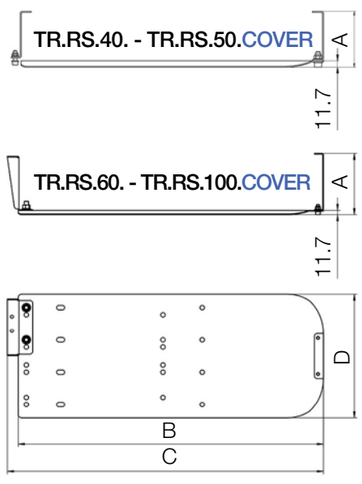

RS retraction system

Installation dimensions

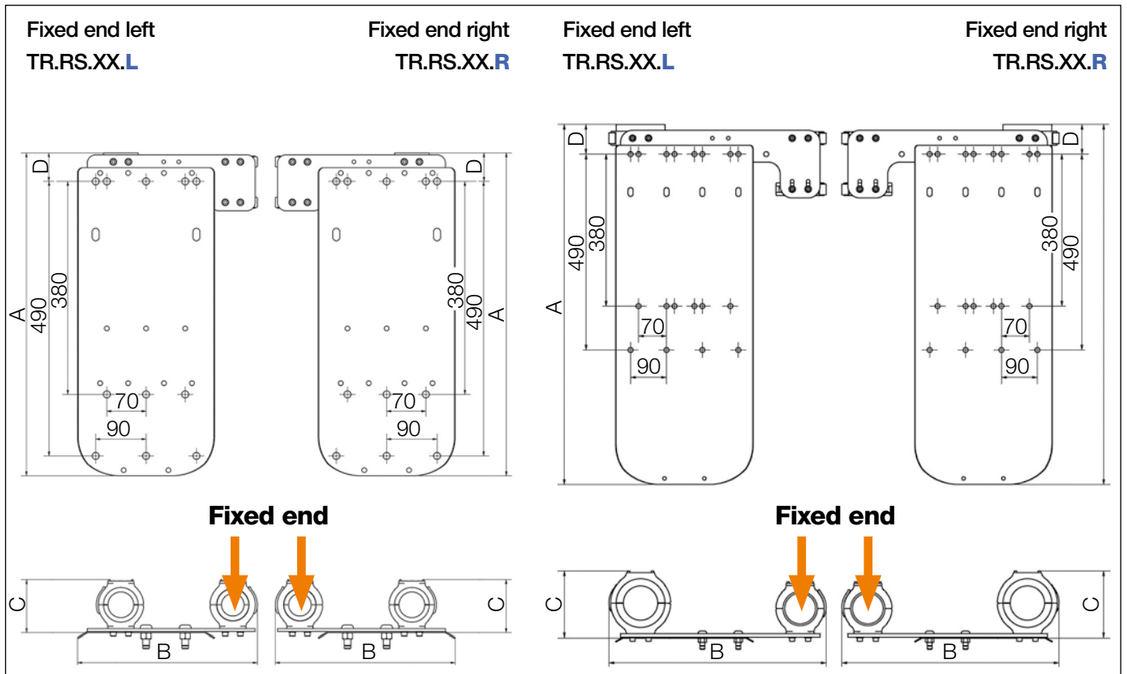

Diagram shows triflex® RS ø index: 40 - 50

Diagram shows triflex® RS ø index: 60 - 100

RS modular retraction system (diagram shows the fixed end on the left)

Mounting bracket and gliding feed-through are included.

Please order matching triflex® R e-chain® separately.

RS e-chains®

Product range

Product range | Matching e-chains® for RS

Ø Index	Part No. **TRC** enclosed	Part No. **TRE** "easy" design
30.	–	–
40.	TRC.RS.40.058.LLLL.0	TRE.RS.40.058.LLLL.0.B
50.	TRC.RS.50.080.LLLL.0	TRE.RS.50.080.LLLL.0.B
60.	TRC.RS.60.087.LLLL.0	TRE.RS.60.087.LLLL.0.B
65.	–	–
65. (*R 200*)	–	–
70.	TRC.RS.70.110.LLLL.0	TRE.RS.70.110.LLLL.0.B
85.	TRC.RS.85.135.LLLL.0	TRE.RS.85.135.LLLL.0.B
85. (*R 240*)	–	–
100.	TRC.RS.100.145.LLLL.0	TRE.RS.100.145.LLLL.0.B/C
125.	–	–

1) Available for B- and C-versions

*Standard lengths from the gliding feed-through outside the system - special lengths upon request.

e-chains® standard lengths*

LLLL [mm] | **0500** | **1000** | **1500** | **2000** |

Part No. with **LLLL** standard length value (measured from the gliding feed-through) corresponds to the robot arm length from axis 3. For example: **TRC.RS.60.087.0500.0**

RS e-chains®

Cable length calculation

Calculation of the e-chain® total length | RS e-chain®

Ø Index	Bend radius *R* [mm]	e-chain® length* [mm]	Number of e-chains® links	e-chain® overall length [mm]
30.	–	–	–	–
40.	058	1,251	90	LLLL + 1,251
50.	080	1.409	81	LLLL + 1,409
60.	087	1,734	85	LLLL + 1,734
65.	–	–	–	–
65. (*R 200*)	–	–	–	–
70.	110	1,895	74	LLLL + 1,895
85.	135	2,080	68	LLLL + 2,080
85. (*R 240*)	–	–	–	–
100.	145	2,105	61	LLLL + 2,105
125.	–	–	–	–

*Values are related to the e-chain® length within the system

To calculate the total e-chain® length: please add the e-chain® length* within the system to the **LLLL** standard additional length (measured from the gliding feed-through)

More information and installation dimensions | RS e-chains®

- **TRC series** - closed design, chip protection, smooth outer contour ▶ **From page 28**
- **TRE series** - "easy" design, very easy to fill, simply press cables in ▶ **From page 30**

RSP retraction system

Pneumatic retraction system

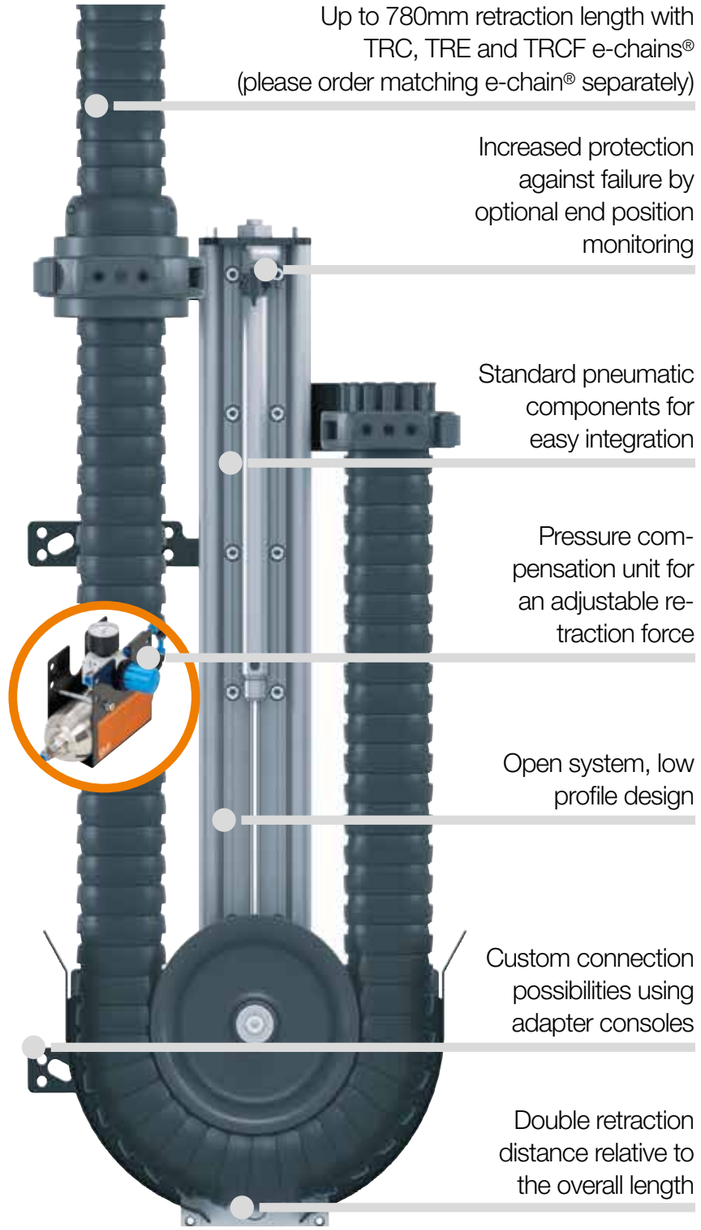

Pneumatic retraction system - triflex® RSP

triflex® RSP prevents loops on the robot head, with a continuously adjustable retraction force. Extension lengths of up to 780mm enable a secure guidance of the cables and hoses, even with large arm diameters and very complex movements. The retraction forces can be adjusted using a pneumatic cylinder. Whether light or heavy fill weights, long or short robot arms - with the igus® RSP retraction system the retraction force can be adjusted to the individual application.

- For axis 3-6 on industrial robots
- Larger retraction forces than RS system
- Even larger e-chains® up to Ø 125mm can be guided safely
- Almost constant force over the complete travel, even with heavy fill weights
- The end position can be monitored so damage can be prevented
- Mounting options for numerous robot models and manufacturers with adapter consoles
- Very low energy consumption with integrated air reservoir

Assembly video online:
Please scan the QR code or visit
▶ www.igus.eu/assembly-RSP-system

RSP applications

RSP - R(etraction) S(ystem) P(neumatic)

Pneumatic retraction system triflex® RSP - prevents loops forming in the robot's working area

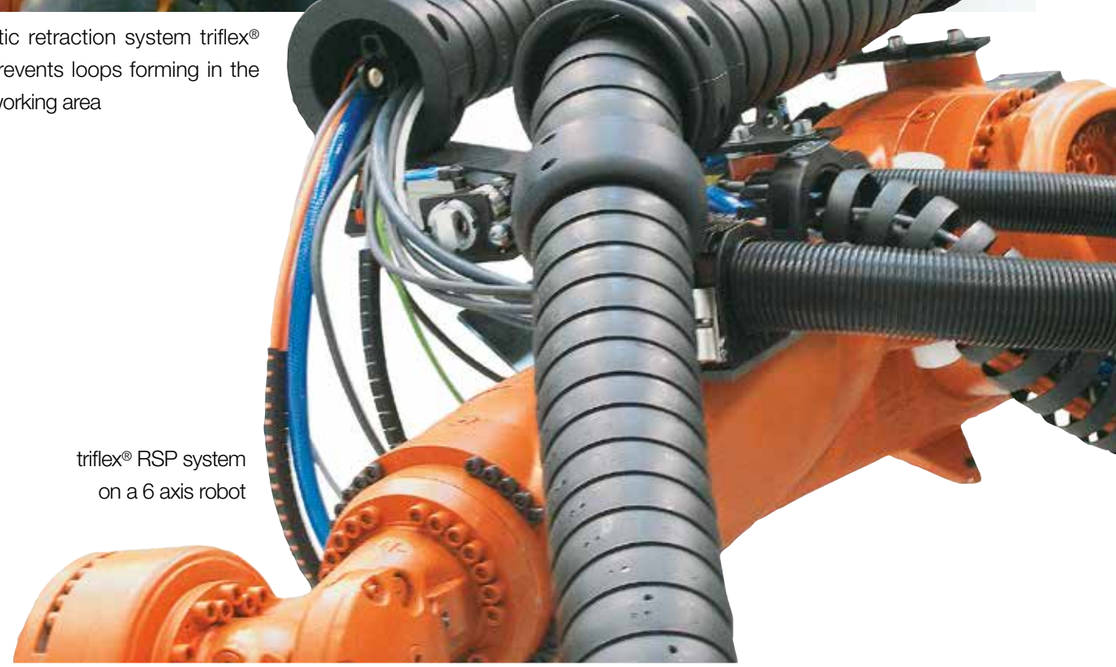

triflex® RSP system on a 6 axis robot

RSP retraction system

System design with matching e-chains®

Matching triflex® R e-chain® for RSP
TRC .RSP.XX.*R*.LLLL.0
TRE .RSP.XX.*R*.LLLL.0.(B)
TRCF.RSP.XX.*R*.LLLL.0

e-chain® overall length =
additional length from the gliding feed-through **LLLL +** the e-chain® length within the system

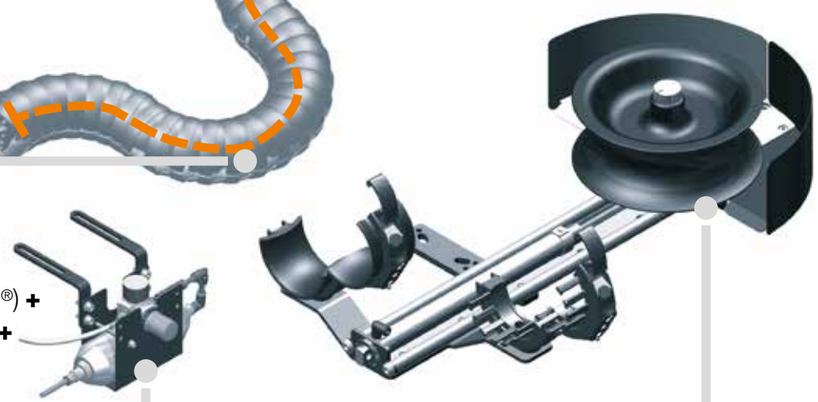

RSP system (without e-chain®) **+**
Pressure compensation unit **+**
Mounting bracket **+**
Gliding feed-through **=**
TR.RSP.XX.L or
TR.RSP.XX.R

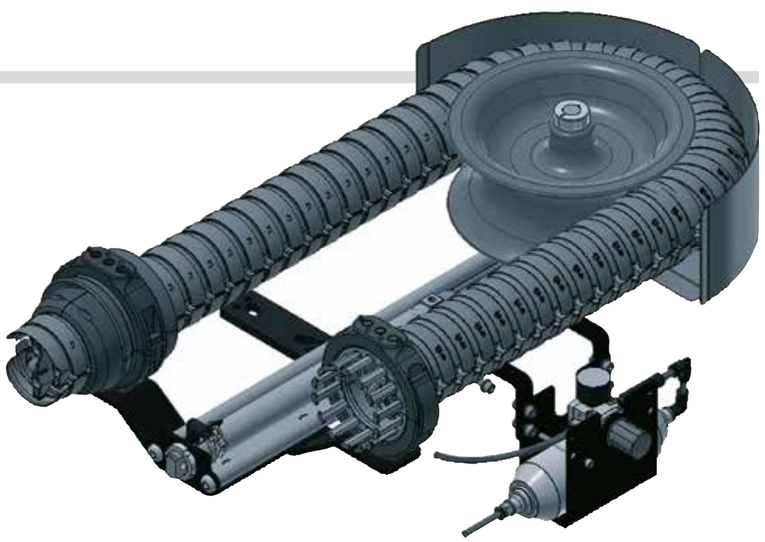

Complete RSP pneumatic retraction system with fixed end on the left and TRE triflex® R series. Pressure compensation unit, mounting bracket and gliding feed-through are included in the delivery. Please order matching triflex® R e-chain® separately.

RSP retraction system

Sample order of a retraction system including e-chain®

Sample order of a complete TR.RSP system, ø index 85, fixed end on the left, and e-chain® (standard length: 500mm)

System	Insert Ø index / select fixed end **.L / .R**	**TR.RSP.85.L**
+ e-chain®	Insert ø index / Insert bend radius *R* / Insert standard length **LLLL**	**TRC.RSP.85.135.1000.0**
Order text:	**TR.RSP.85.L + TRC.RSP.85.135.1000.0**	

Retraction system order key

TR.RSP.85.L
TR.RSP.85.R

- **L** = Fixed end right or
- **R** = Fixed end left
- ø index
- Retraction system
- Series

e-chains® order key

TRC .RSP.85.135.1000.0
TRE .RSP.85.135.1000.0.B
TRCF.RSP.85.135.1000.0

- Default colour black
- **LLLL** = Additional length
- *R* Bend radius
- ø index
- Retraction system
- e-chains® series

Optional accessories | RSP pneumatic retraction system

Adjustment unit
for accurate adjustment of the system position
▶ Page 122

Adapter consoles
for custom mounting options
▶ Page 123

Axis 6 clamp
for triflex® mounting bracket
▶ Page 126

RSP retraction system

Product range

Product range | RSP pneumatic retraction system

Ø Index	Part No. fixed end **left**	Part No. fixed end **right**	Retraction length[1] ≤ [mm]	A [mm]	B [mm]	C [mm]	D [mm]	E [mm]	Weight[2] [kg]
30.	–	–	–	–	–	–	–	–	–
40.	–	–	–	–	–	–	–	–	–
50.	–	–	–	–	–	–	–	–	–
60.	**TR.RSP.60.L**	**TR.RSP.60.R**	580	792	396	177	277	135	16.1
65.	**TR.RSP.65.L**	**TR.RSP.65.R**	580	792	396	177	277	135	16.1
65. (*R 200*)	–	–	–	–	–	–	–	–	–
70.	**TR.RSP.70.L**	**TR.RSP.70.R**	580	792	396	177	277	135	16.2
85.	**TR.RSP.85.L**	**TR.RSP.85.R**	620	836	461	213	306	135	19.4
85. (*R 240*)	–	–	–	–	–	–	–	–	–
100.	**TR.RSP.100.L**	**TR.RSP.100.R**	620	845	467	213	306	135	19.5
125.	**TR.RSP.125.L**	**TR.RSP.125.R**	780	1,043	570	245	405	135	24.1

Pressure compensation unit, mounting bracket and gliding feed-through are included. Please order matching triflex® R e-chain® separately.

1) Max. retraction length 2) Plus 2.3kg for pressure compensation unit

RSP retraction system

Installation dimensions

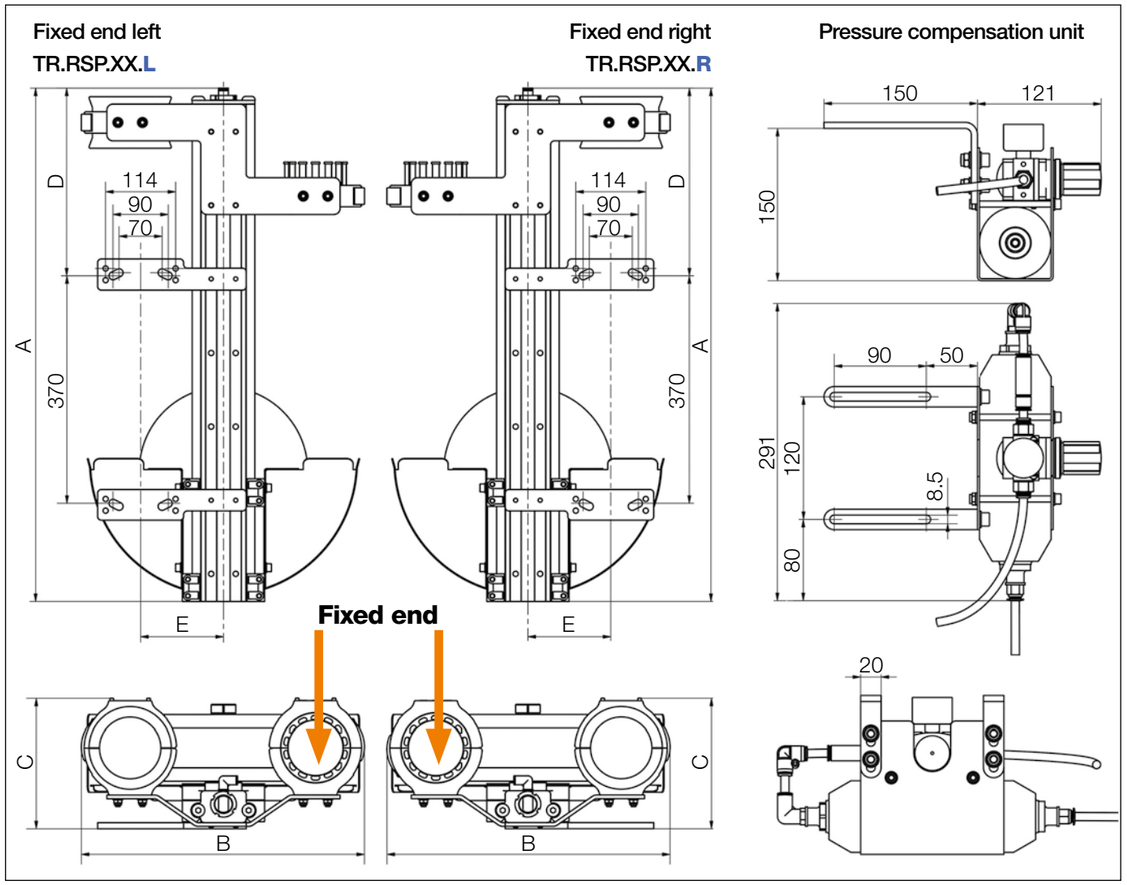

RSP pneumatic retraction system (diagram shows fixed end left version)

Pressure compensation unit, mounting bracket and gliding feed-through are included.

Please order matching triflex® R e-chain® separately.

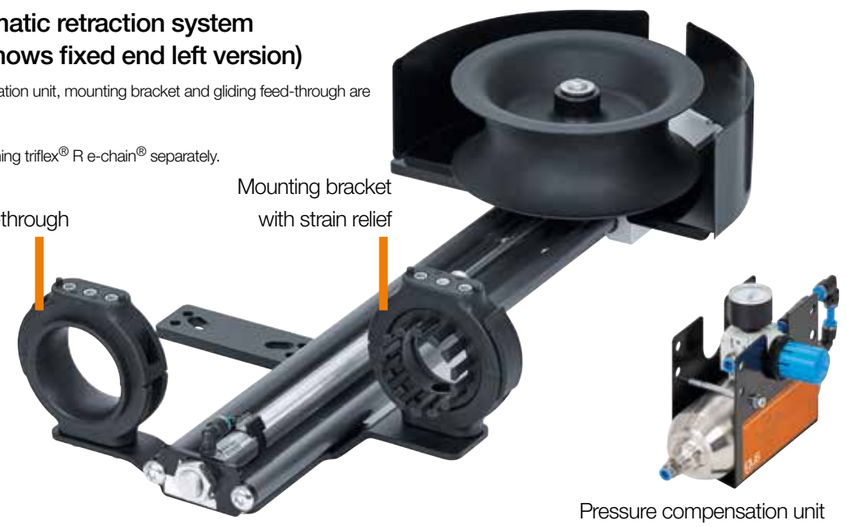

RSP e-chains®

Product range

Product range | Matching e-chains® for RSP

Ø Index	Part No. **TRC** enclosed	Part No. **TRE** "easy" design	Part No. **TRCF** with snap-lock mechanism
30.	–	–	–
40.	–	–	–
50.	–	–	–
60.	TRC.RSP.60.087.LLLL.0	TRE.RSP.60.087.LLLL.0.B	–
65.	–	–	TRCF.RSP.65.100.LLLL.0
65. (*R 200*)	–	–	–
70.	TRC.RSP.70.110.LLLL.0	TRE.RSP.70.110.LLLL.0.B	–
85.	TRC.RSP.85.135.LLLL.0	TRE.RSP.85.135.LLLL.0.B	TRCF.RSP.85.135.LLLL.0
85. (*R 240*)	–	–	–
100.	TRC.RSP.100.145.LLLL.0	TRE.RSP.100.145.LLLL.0.B/C [1)]	TRCF.RSP.100.145.LLLL.0
125.	TRC.RSP.125.182.LLLL.0	TRE.RSP.125.182.LLLL.0	–

1) Available for B- and C-versions

*Standard lengths from the gliding feed-through outside the system - special lengths upon request.

e-chains® standard lengths*

LLLL [mm] | **0500** | **1000** | **1500** | **2000** |

Part No. with **LLLL** standard length value (measured from the gliding feed-through) corresponds to the robot arm length from axis 3. For example: **TRC.RSP.60.087.0500.0**

RSP e-chains®

Cable length calculation

Calculation of the e-chain® total length | RSP e-chain®

Ø Index	Bend radius *R* [mm]	e-chain® length* [mm]	Number of e-chains® links	e-chain® overall length [mm]
30.	–	–	–	–
40.	–	–	–	–
50.	–	–	–	–
60.	087	1,489	73	**LLLL** + 1,489
65.	100	1,432	62	**LLLL** + 1,432
65. (*R 200*)	–	–	–	–
70.	110	1,484	58	**LLLL** + 1,484
85.	135	1,622	53	**LLLL** + 1,622
85. (*R 240*)	–	–	–	–
100.	145	1,656	48	**LLLL** + 1,656
125.	182	1,962	44	**LLLL** + 1,962

*Values are related to the e-chain® length within the system

To calculate the total e-chain® length: please add the e-chain® length* within the system to the **LLLL** standard length (measured from the gliding feed-through)

e-chain® overall length =
additional length from the gliding feed-through **LLLL** +
the e-chain® length within the system

More information and installation dimensions | RSP e-chains®

- **TRC series** - closed design, chip protection, smooth outer contour ▶ **From page 28**
- **TRE series** - "easy" design, very easy to fill, simply press cables in ▶ **From page 30**
- **TRCF series** - closed design with snap-lock mechanism, chip protection, smooth outer contour ▶ **Page 32**

RSE retraction system

Cost-effective retraction system with deflection

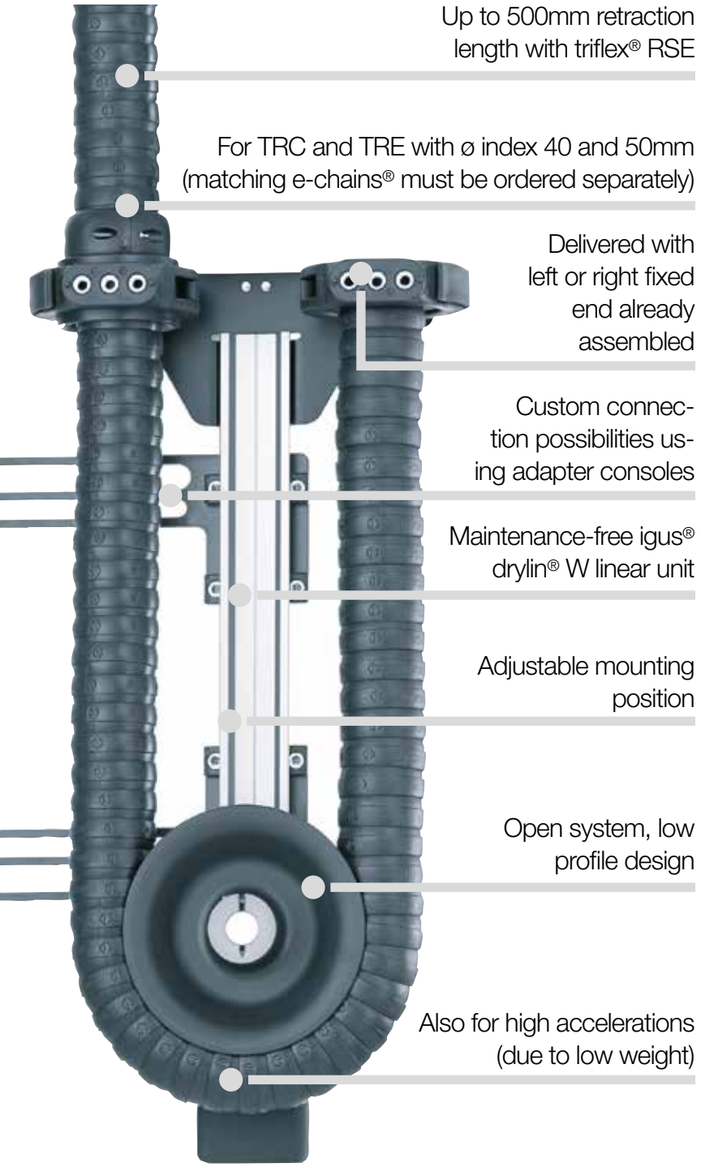

Cost-effective retraction system with deflection for small robots - triflex® RSE

Specially developed for robots with small to medium cable and hose filling, the igus® triflex® RSE retraction system offers a way to prevent loop formation in the workspace of the robot, even in highly dynamic applications.

- For series TRC·TRE with ø index 40 and 50mm
- Extremely fast response, even in highly dynamic robot programs
- Low weight, very little reduction in robot handling capacity
- Universal adjustable installation brackets
- Maintenance and lubrication-free igus® drylin® W linear unit
- For maximum degrees of freedom
- For cable diameters up to 18.8mm

RSE applications

RSE - R(etraction) S(ystem) E(lastic)

Reliable and controlled energy supply, even in confined space with the igus® triflex® RSE retraction system

e-chain® is guided closely to the arm with a low profile

RSE retraction system

System design with matching e-chains®

Optional cover for additional installation space on the robot: **TR.RSE.XX.COVER**

Matching triflex® R e-chains® for RSE with integrated fibre-rods
TRC.RSE.XX.*R*.LLLL.0
TRE.RSE.XX.*R*.LLLL.0.B

e-chain® overall length =
additional length from the gliding feed-through **LLLL +**
the e-chain® length within the system

RSE system (e-chain® not included) **+**
Mounting bracket **+**
Gliding feed-through **=**
TR.RSE.(02).XX.L or
TR.RSE.(02).XX.R

Complete RSE retraction system with deflection, with fixed end on the right and TRC triflex® R series. Mounting bracket and gliding feed-through are included. Please order matching triflex® R e-chain® and optional cover separately.

RSE retraction system

Sample order of a retraction system including e-chain®

Sample order of a complete TR.RSE system, ø index 50, fixed end on the left, including cover and e-chain® (standard length: 500mm)

System	Insert Ø index / select fixed end **.L / .R**	**TR.RSE.50.L**
+ Cover	Insert Ø index (cover optional)	**TR.RSE.50.COVER**
+ e-chain®	Insert ø index / Insert bend radius ***R*** / Insert standard length **LLLL**	**TRC.RSE.50.080.0500.0**
Order text:	**TR.RSE.50.L + TR.RSE.50.COVER + TRC.RSE.50.080.0500.0**	

Retraction system order key

TR.RSE.50.L
TR.RSE.50.R

- **L** = Fixed end right or
- **R** = Fixed end left
- ø index
- Retraction system
- Series

e-chains® order key

TRC.RSE.50.080.0500.0
TRE.RSE.50.080.0500.0.B

- Default colour black
- **LLLL** = Additional length
- ***R*** Bend radius
- ø index
- Retraction system
- e-chains® series

Optional accessories | RS modular retraction system

Cover
for additional installation space and complex movements
▶ **Page 94**

Adapter consoles
for custom mounting options
▶ **Page 123**

Axis 6 clamp
for triflex® R mounting bracket
▶ **Page 126**

RSE retraction system

Product range

Product range | RSE cost-effective retraction system with deflection

Ø Index	Part No. fixed end **left**	Part No. fixed end **right**	Retraction length[1] ≤ [mm]	A [mm]	B [mm]	C [mm]	D [mm]	Weight [kg]
30.	–	–	–	–	–	–	–	–
40.	TR.RSE.02.40.L	TR.RSE.02.40.R	500	440	220	110	64.7	1.6
50.	TR.RSE.50.L	TR.RSE.50.R	500	497	275	132	79	2.1
60.	–	–	–	–	–	–	–	–
65.	–	–	–	–	–	–	–	–
65. (*R 200*)	–	–	–	–	–	–	–	–
70.	–	–	–	–	–	–	–	–
85.	–	–	–	–	–	–	–	–
85. (*R 240*)	–	–	–	–	–	–	–	–
100.	–	–	–	–	–	–	–	–
125.	–	–	–	–	–	–	–	–

Please order matching triflex® R e-chain® separately. 1) Max. retraction length.

Product range | RSE cover, optional

Ø Index	Optional cover retrofit kit	A [mm]	B [mm]	C [mm]	D [mm]	Load* ≤ [kg]	Weight [kg]
30.		–	–	–	–	–	–
40.	TR.RSE.40.COVER	115	240	180	200	1.5	1.1
50.	TR.RSE.50.COVER	126	300	248	248	1.5	1.7
60.		–	–	–	–	–	–
65.		–	–	–	–	–	–
65. (*R 200*)		–	–	–	–	–	–
70.		–	–	–	–	–	–
85.		–	–	–	–	–	–
85. (*R 240*)		–	–	–	–	–	–
100.		–	–	–	–	–	–
125.		–	–	–	–	–	–

*Maximum fill weight to be used with the cover

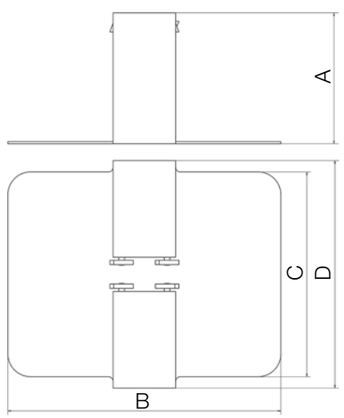

RSE retraction system

Installation dimensions

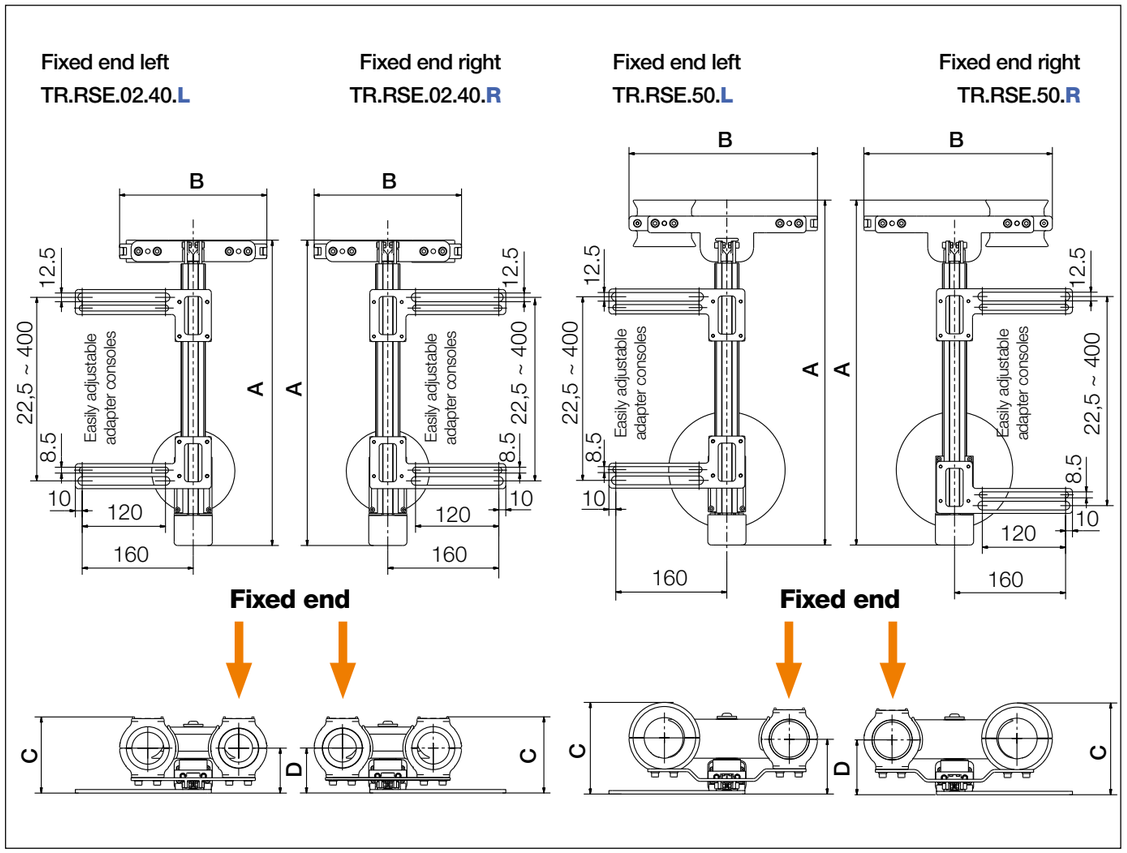

RSE - retraction system with deflection for small robots (diagram shows the fixed end on the left)

Mounting bracket and gliding feed-through are included.

Please order matching triflex® R e-chain® separately.

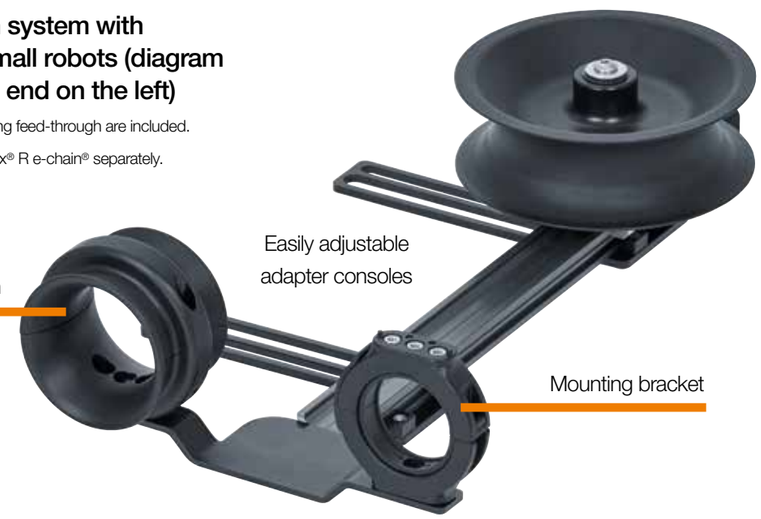

RSE e-chains®

Product range

Product range | Matching e-chains® for RSE

Ø Index	Part No. **TRC** enclosed	Part No. **TRE** "easy" design
30.	–	–
40.	TRC.RSE.40.058.LLLL.0	TRE.RSE.40.058.LLLL.0.B
50.	TRC.RSE.50.080.LLLL.0	TRE.RSE.50.080.LLLL.0.B
60.	–	–
65.	–	–
65. (*R 200*)	–	–
70.	–	–
85.	–	–
85. (*R 240*)	–	–
100.	–	–
125.	–	–

*Standard lengths from the gliding feed-through outside the system - special lengths upon request.

e-chains® standard lengths*

LLLL [mm] | **0500** | **0750** | **1000** | **1250** |

Part No. with **LLLL** standard length value (measured from the gliding feed-through) corresponds to the robot arm length from axis 3. For example: **TRC.RSE.40.058.0500.0**

RSE e-chains®

Cable length calculation

Calculation of the e-chain® total length | RSE e-chain®

Ø Index	Bend radius *R* [mm]	e-chain® length* [mm]	Number of e-chains® links	e-chain® overall length [mm]
30.	–	–	–	–
40.	058	904	65	**LLLL** + 904
50.	080	1,044	60	**LLLL** + 1,044
60.	–	–	–	–
65.	–	–	–	–
65. (*R 200*)	–	–	–	–
70.	–	–	–	–
85.	–	–	–	–
85. (*R 240*)	–	–	–	–
100.	–	–	–	–
125.	–	–	–	–

*Values are related to the e-chain® length within the system

To calculate the total e-chain® length: please add the e-chain® length* within the system to the **LLLL** standard additional length (measured from the gliding feed-through)

e-chain® overall length =
additional length from the gliding feed-through **LLLL** +
the e-chain® length within the system

More information and installation dimensions | RSE e-chains®

- **TRC series** - closed design, chip protection, smooth outer contour ▶ **From page 28**
- **TRE series** - "easy" design, very easy to fill, simply press cables in ▶ **From page 30**

RSE·RSEC linear

Compact retraction system, linear

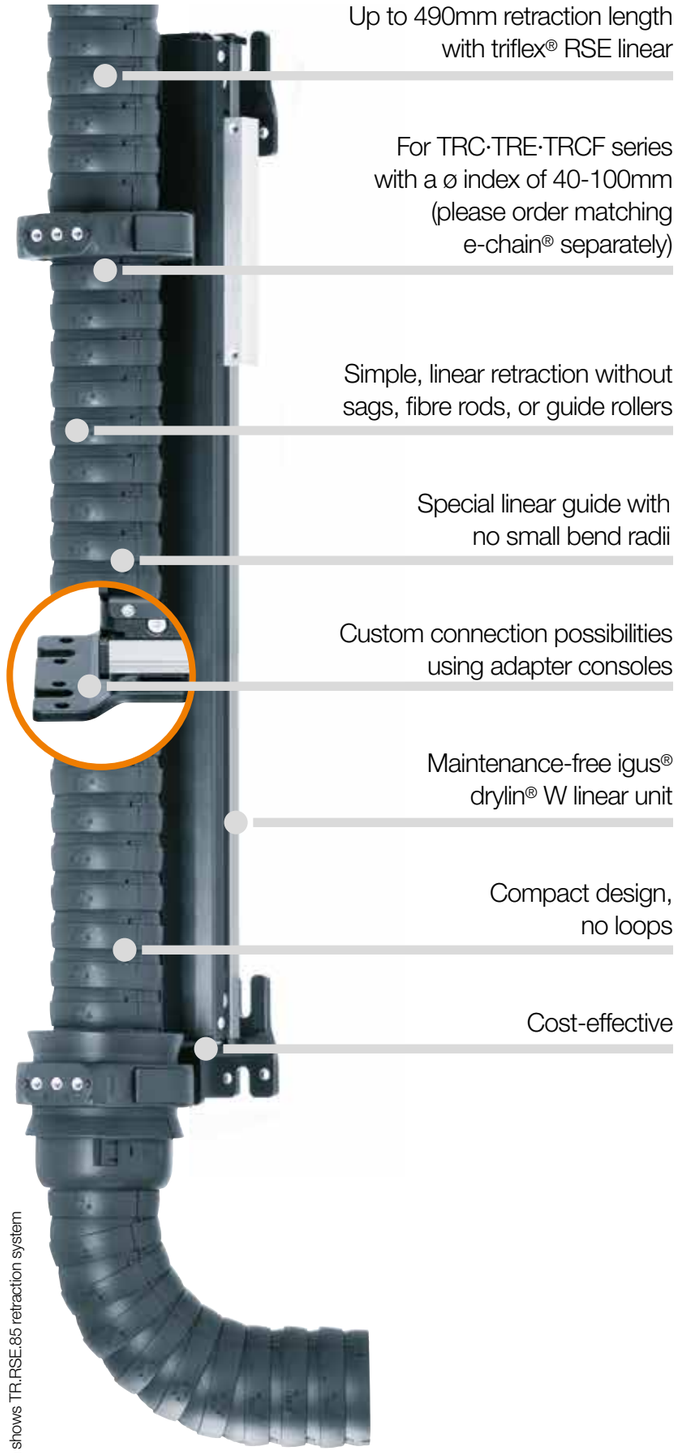

Illustration shows TR.RSE.85 retraction system

Compact retraction system - triflex® RSE and RSEC linear

It is increasingly the case that not only electric power and fluids have to be supplied to production robots; but also laser cables and supply hoses for rivets, pins and screws. As these often cannot function with small bend radii, the new triflex® RSE and RSEC relies on very easy linear retraction without loops and spring rods or deflection rollers. The purpose of the triflex® RSE and RSEC retraction system is to hold the e-chain® as closely as possible to the robot arm in order to prevent the e-chain® from intruding upon or blocking the robot's movements.

- Simple, linear retraction without sags, fibre rods, or guide rollers
- For series TRC·TRE·TRCF with ø-index 40-100mm
- Special linear guide with no small bend radii
- Up to 490mm retraction length
- Space-saving and cost-effective
- Maintenance-free drylin® W linear unit

RSE·RSEC linear

RSE linear - R(etraction) S(ystem) E(lastic) linear
RSEC linear - R(etraction) S(ystem) E(lastic) C(ompact) linear

igus® TR.RSE system on test robot

Lightweight, linear retraction system for small robots. RSE·RSEC linear for sizes TR.RSE.40, TR.RSE.50, TR.RSEC.60, TR.RSEC.65 and TR.RSEC.65.200 ▶ **From page 102**

Linear retraction system with attachment brackets for a wide variety of robot models. RSE linear sizes TR.RSE.60 up to TR.RSE.100 ▶ **From page 104**

RSE linear retraction system

System design with matching e-chains®

Matching triflex® R e-chain® for RSE linear
TRC .XX.*R*.0
TRE .XX.*R*.0.B
TRCF.XX.*R*.0

e-chain® total length* =
Additional length **A1** +
Dimension **A** +
Additional length **A6**

Limit protector

RSE linear system
(without e-chain®) +
Mounting bracket +
Gliding feed-through =
TR.RSE.XX

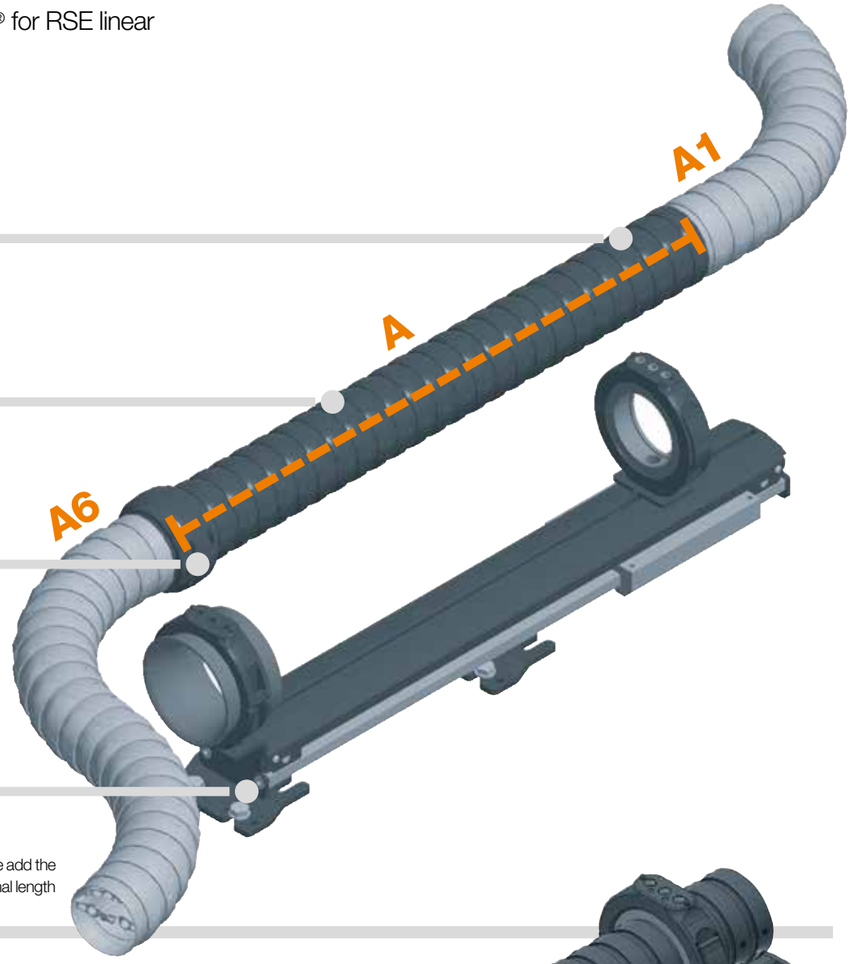

*To calculate the e-chain® total length: please add the additional length in direction **A1**, the additional length in direction **A6** and the dimension **A**.

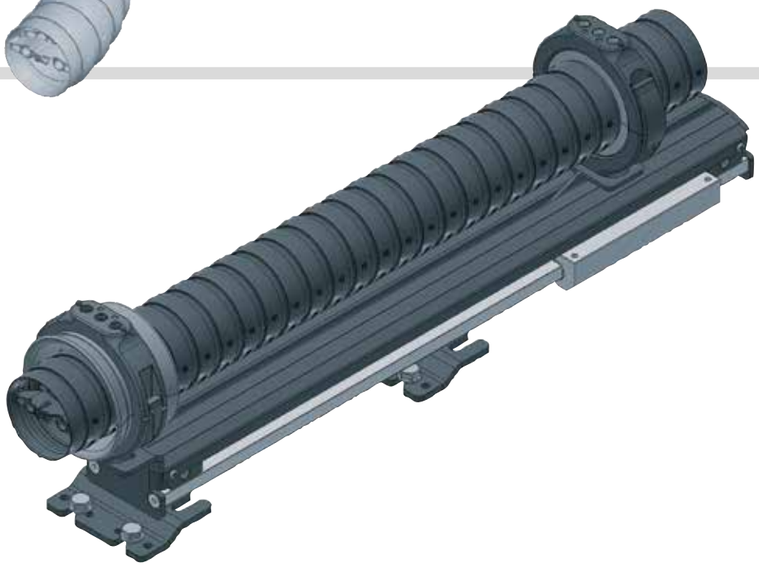

Complete RSE linear retraction system with TRE triflex® R series. Mounting bracket and gliding feed-through are included. Please order matching triflex® R e-chain®, optional limit protector and RSE linear supports separately.

RSE linear retraction system

Sample order of a retraction system including e-chain®

Sample order of a complete TR.RSE linear system, ø index 85, and e-chain® (length: 2m)

System	Insert ø index	**TR.RSE.85**
+ e-chain®	Insert ø index / Insert bend radius *R* / Insert length in metres	**2m TRC.85.135.0**
+ Protector	Insert protector variant / Insert ø index	**TR.85.30**
Order text:	**TR.RSE.85. + 2m TRC.85.135.0 + TR.85.30**	

Retraction system order key

TR.RSE.85
- ø index
- Retraction system
- Series

e-chains® order key

TRC .85.135.0
TRE .85.135.0.B
TRCF.85.135.0
- Default colour black
- *R* Bend radius
- ø index
- e-chains® series

Optional accessories | RSE linear pneumatic retraction system

RSE linear support
for lateral deflection
of the triflex® R, optional
▶ Page 104

Protectors
with screw connections
or quick release
▶ Page 47

Adapter consoles
for custom
mounting options
▶ Page 123

Axis 6 clamp
for triflex® R
mounting bracket
▶ Page 126

RSE·RSEC linear

Product range

Product range | RSE·RSEC linear | For Ø index 40-65

Ø Index	Part No. RSE linear	Retraction length[1] ≤ [mm]	A [mm]	B [mm]	C [mm]	Weight [kg]	Part No. RSE support	Principle sketch
30.	–	–	–	–	–	–	–	
40.	TR.RSE.40	290	457	140	143	1.4	TR.919.540.40.02	
50.	TR.RSE.50	290	475	140	151	1.7	TR.919.540.50.02	
60.	TR.RSEC.60	250	476	140	179	2.2	TR.919.540.60.02	
65.	TR.RSEC.65	250	488	140	179	2.2	TR.919.540.65.02	For lateral
65. (R 200)	TR.RSEC.65.200	250	488	140	179	2.2	–	deflection of energy supply

Please order matching triflex® R e-chain® separately. 1) Max. retraction length. Optional RSE support must be ordered separately.

RSE linear sizes TR.RSE.60 up to TR.RSE.100 ▶ From page 104

Product range | RSE linear support, optional

RSE linear support to support and anchor a fixed end loop

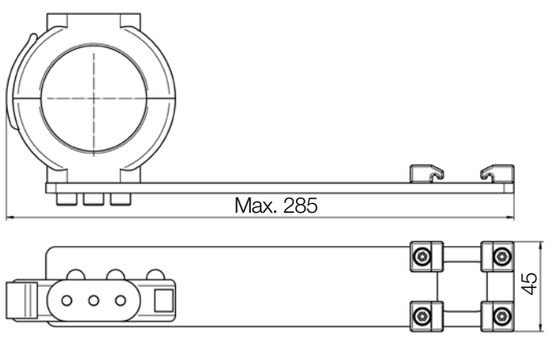

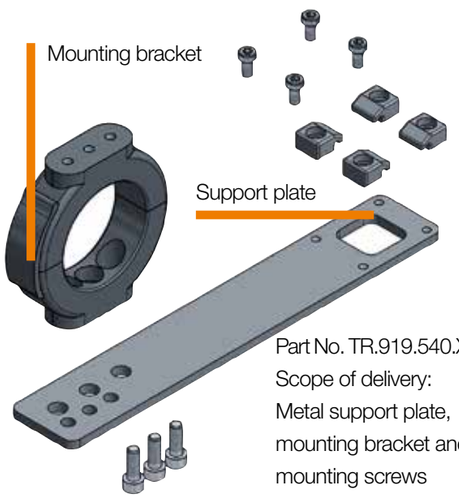

Part No. TR.919.540.XX.02
Scope of delivery:
Metal support plate, mounting bracket and mounting screws

RSE·RSEC linear

Installation dimensions | For Ø index 40-65

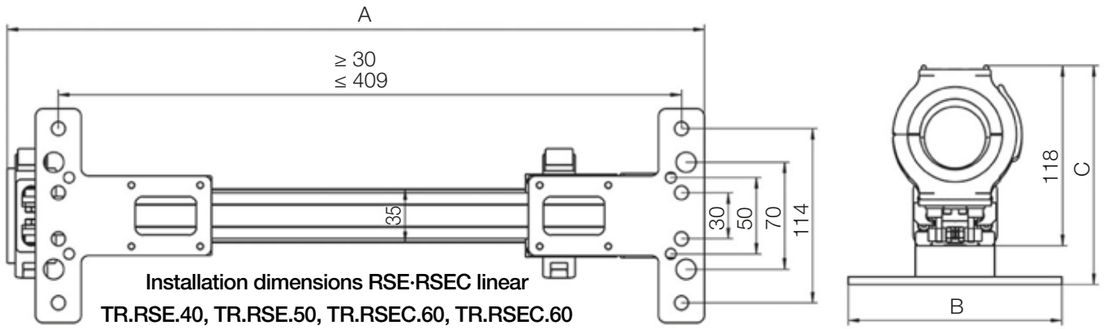

Installation dimensions RSE·RSEC linear
TR.RSE.40, TR.RSE.50, TR.RSEC.60, TR.RSEC.60

RSE·RSEC linear retraction system

Mounting bracket and gliding feed-through are included.

Please order matching triflex® R e-chain® separately.

RSE linear retraction system
Product range

Product range | RSE linear | For Ø index 60-100

Ø Index	Part No. RSE linear	Retraction length[1] ≤ [mm]	A [mm]	B [mm]	C [mm]	Weight [kg]	Part No. RSE support	Principle sketch
60.	TR.RSE.60	490	868	134	231	9.9	TR.914.973.60	
65.	TR.RSE.65	490	880	134	231	10.0	TR.914.973.65	
65. (R 200)	TR.RSE.65.200	490	880	134	231	10.0	TR.919.991	
70.	TR.RSE.70	490	878	155	258	10.0	TR.914.973.70	
85.	TR.RSE.85	490	885	155	258	10.0	TR.914.973.85	For lateral
85. (R 240)	TR.RSE.85.240	490	885	155	258	10.0	TR.919.220	deflection of
100.	TR.RSE.100	490	886	170	264	10.2	TR.914.973.100	energy supply
125.	–	–	–	–	–	–	–	

Please order matching triflex® R e-chain® separately. 1) Max. retraction length. Optional RSE support must be ordered separately.

RSE linear for sizes TR.RSE.40, TR.RSE.50, TR.RSEC.60, TR.RSEC.65, TR.RSEC.65.200 ▶ From page 102

Product range | RSE linear support, optional

RSE linear support to support and anchor a fixed end loop

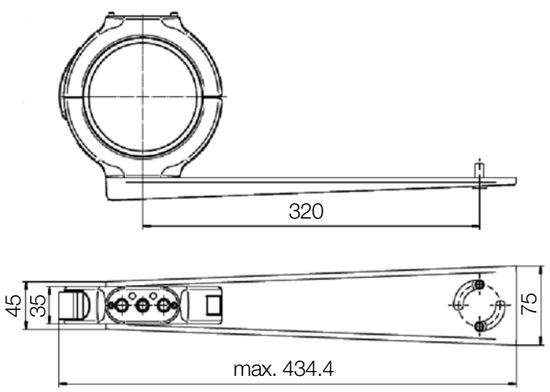

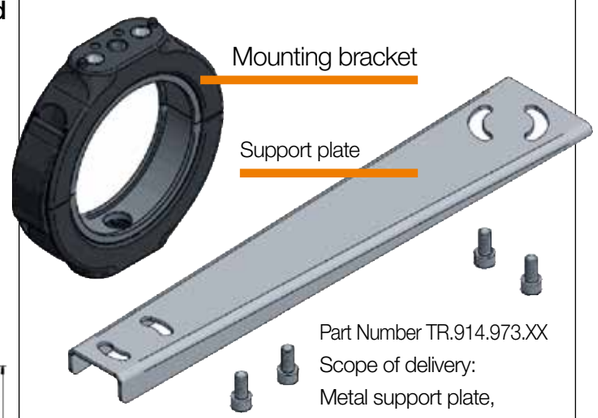

Part Number TR.914.973.XX
Scope of delivery:
Metal support plate, mounting bracket and mounting screws

RSE linear retraction system
Installation dimensions | For Ø index 60-100

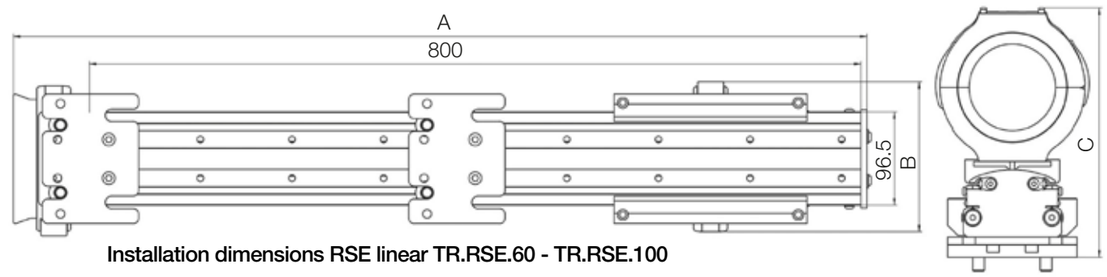

Installation dimensions RSE linear TR.RSE.60 - TR.RSE.100

RSE linear retraction system

Mounting bracket and gliding feed-through are included.

Please order matching triflex® R e-chain® separately.

RSE·RSEC linear e-chains®

Product range

Product range | Matching e-chains® for RSE·RSEC linear

Ø Index	Part No. **TRC** enclosed	Part No. **TRE** "easy" design	Part No. **TRCF** with snap-lock mechanism
30.	–	–	–
40.	TRC.40.058.0	TRE.40.058.0.B	–
50.	TRC.50.080.0	TRE.50.080.0.B	–
60.	TRC.60.087.0	TRE.60.087.0.B	–
65.	–	–	TRCF.65.100.0
65. (*R 200*)	–	–	TRCF.65.200.0
70.	TRC.70.110.0	TRE.70.110.0.B	–
85.	TRC.85.135.0	TRE.85.135.0.B	TRCF.85.135.0
85. (*R 240*)	–	–	TRCF.85.240.0
100.	TRC.100.145.0	TRE.100.145.0.B/C[1)]	TRCF.100.145.0
125.	–	–	–

1) Available for B- and C-versions

Please note that all triflex® R e-chains® can be lengthened and shortened individually and can be customised to meet the needs of your application.

Please order e-chains® as piece parts and purchase a protector for each one.

Product range | Matching protectors for RSE·RSEC linear

Ø Index	❶ Part No. Protector with screw fastener	❷ Part No. Protector with quick-lock fastener	Principle sketch protectors variants
30.	–	–	
40.	TR.40.10	TR.40.30	
50.	TR.50.10	TR.50.30	
60.	TR.60.10	TR.60.30	
65.	TR.65.10	TR.65.30	
65. (*R 200*)	–	–	
70.	TR.70.10	TR.70.30	
85.	TR.85.10	TR.85.30	
85. (*R 240*)	TR.85.240.10	–	
100.	TR.100.10	TR.100.30	More information about
125.	–	–	protectors ▶ Page 47

Please order protectors with screw connections or quick release as limit protectors.

RSE·RSEC linear e-chains®

Cable length calculation

Calculation of the e-chain® total length | RSE·RSEC linear e-chain®

Series	Ø Index	Bend radius *R* [mm]	**Dimension A** [mm]	Principle sketch e-chains® total length	Direction **A1** **excess length**
RSE	30.	–	–		
RSE	40.	058	390		
RSE	50.	080	390	**Dimension A**	
RSEC	60.	080	390		
RSE	60.	087	750		
RSE	65.	100	750	Direction **A6**	
RSE	65. (*R 200*)	200	750	**additional length**	
RSE	70.	110	750		
RSE	85.	135	750		
RSE	85. (*R 240*)	240	750		
RSE	100.	145	750		
RSE	125.	–	–		

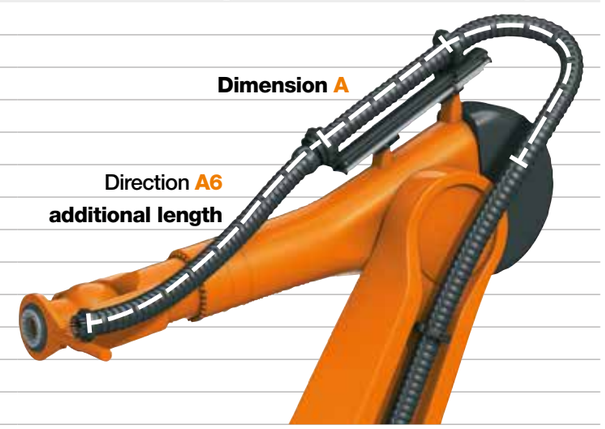

To calculate the e-chain® total length: please add the additional length **A1, the additional length A6** and the dimension **A**. Additionally, at least 1 limit protector must be ordered

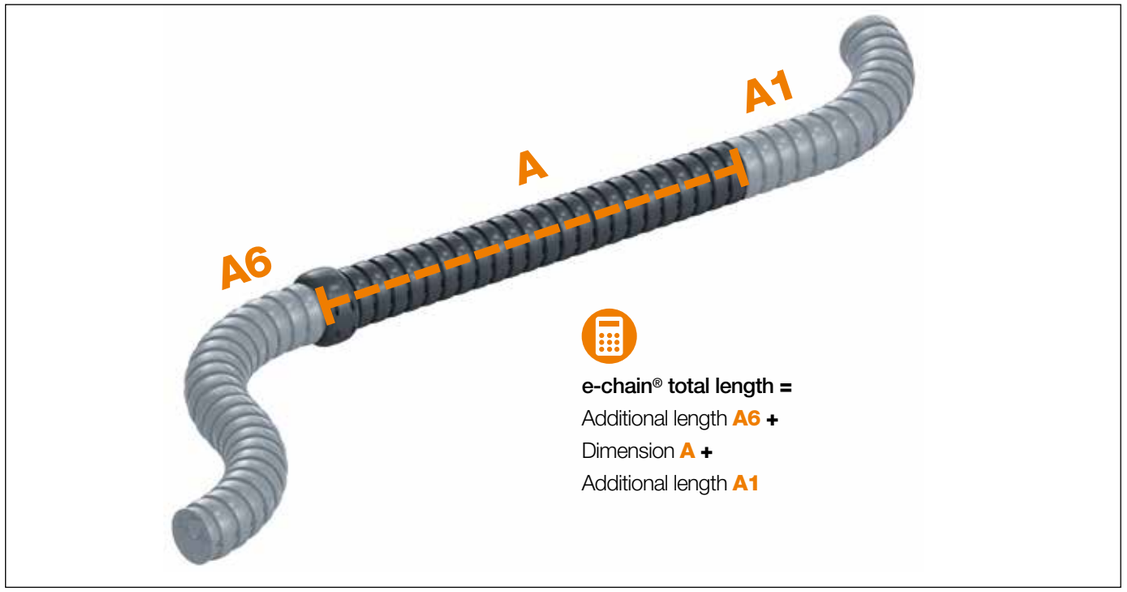

More information and installation height | RSE linear e-chains®

- **TRC series** - closed design, chip protection, smooth outer contour ▶ **From page 28**
- **TRE series** - "easy" design, very easy to fill, simply press cables in ▶ **From page 30**
- **TRCF series** - closed design with snap-lock mechanism, chip protection, smooth outer contour ▶ **Page 32**

RSEL·RSSL retraction system

Cost-effective linear retraction system

Assembly video online:
Please scan the QR code or visit
▶ www.igus.eu/assembly-RSEL-system

Cost-effective, linear retraction system - triflex® RSEL and triflex® RSSL

Avoid loops forming on the robot head - more cost-effective - with the RSEL or RSSL retraction system. Especially designed for robots with medium to high payload, the igus® triflex® RSEL and triflex® RSSL retraction systems offer an option to actively avoid loops forming in the working area of the robot by keeping the e-chain® as close as possible to the robot arm.

- Cost-optimised retraction system, easy to retrofit
- Due to standard dimensions and the very compact design, the RSEL and RSSL retraction systems can be mounted directly on the 3rd axis of all common types of robots
- Retraction element with elastomer band - triflex® RSEL
- Retraction element with tension spring - triflex® RSSL
- Prevents hanging e-chain® from hindering or blocking movement, even in highly dynamic applications
- Short design
- Attachment options for numerous robot models
- For robots with high and medium payloads
- The fixed end of the e-chain® can be placed freely due to the linear design of the RSE and RSSL retraction systems

RSEL·RSSL applications

RSEL - R(etraction) S(ystem) E(lastic) L(inear)
RSSL - R(etraction) S(ystem) S(pring) L(inear)

triflex® RSEL - cost-effective and space-saving guidance of the e-chain®

Cable routing from axis 2 to axis 6 on a 6-axis robot

RSEL·RSSL retraction system

System design with matching e-chains®

Matching triflex® R e-chain® for RSEL·RSSL
TRC .XX.*R*.0
TRE .XX.*R*.0.B
TRCF.XX.*R*.0

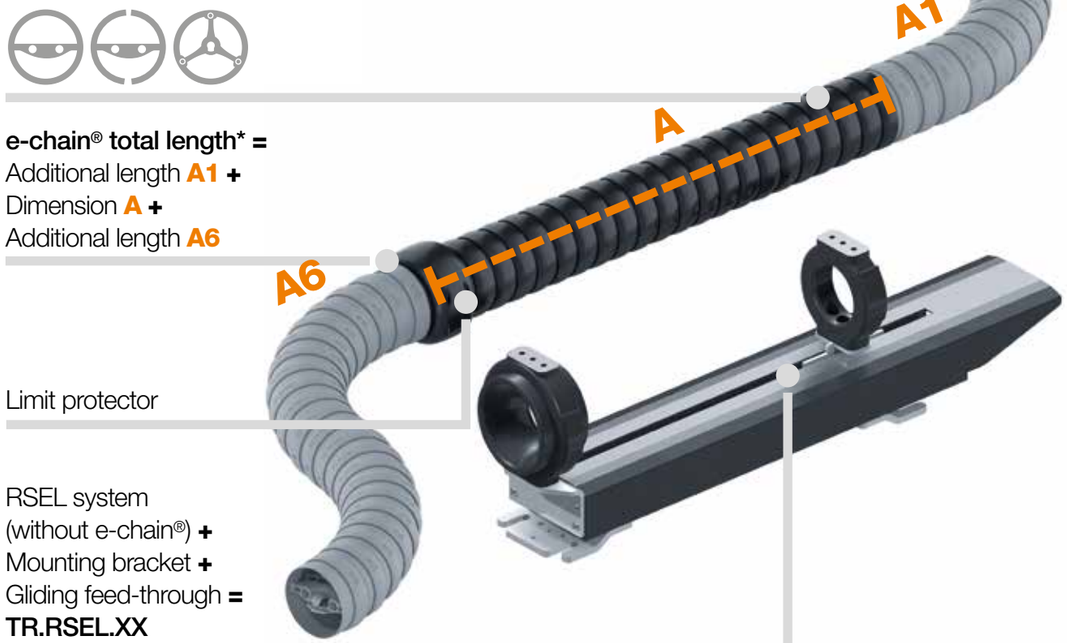

e-chain® total length* =
Additional length **A1** +
Dimension **A** +
Additional length **A6**

Limit protector

RSEL system
(without e-chain®) +
Mounting bracket +
Gliding feed-through =
TR.RSEL.XX

*To calculate the e-chain® total length: please add the additional length in direction **A1**, the additional length in direction **A6** and the dimension **A**.

Complete RSEL·RSSL linear retraction system with TRC triflex® R series. Mounting bracket and gliding feed-through are included. Please order matching triflex® R e-chains® and limiting protectors separately.

RSEL·RSSL retraction system

Sample order of a retraction system including e-chain®

Sample order of a complete TR.RSEL system, ø index 85, and e-chain® (length: 2m)

System	Insert ø index	**TR.RSEL.85**
+ e-chain®	Insert ø index / Insert bend radius *R* / Insert length in metres	**2m TRCF.85.135.0**
+ Protector	Insert protector variant / Insert ø index	**TR.85.30**
Order text:	**TR.RSEL.85. + 2m TRCF.85.135.0 + TR.85.30**	

Retraction system order key

TR.RSEL.85
- ø index
- Retraction system
- Series

e-chains® order key

TRC .85.135.0
TRE .85.135.0.B
TRCF.85.135.0
- Default colour black
- *R* Bend radius
- ø index
- e-chains® series

Optional accessories | RSEL RSSL modular retraction system

Protectors
with screw connections
or quick release
▶ Page 47

Adapter consoles
for custom
mounting options
▶ Page 123

Axis 6 clamp
for triflex® R
mounting bracket
▶ Page 126

RSEL·RSSL retraction system

Product range

Product range | RSEL retraction system

Ø Index	Part No. RSEL	Retraction length[1] ≤ [mm]	A [mm]	B [mm]	C [mm]	Weight [kg]
30.	–	–	–	–	–	–
40.	–	–	–	–	–	–
50.	–	–	–	–	–	–
60.	**TR.RSEL.60**	380	631	126	228	10.6
65.	**TR.RSEL.65**	380	631	126	228	10.6
65. (*R 200*)	TR.RSEL.65.200*	380	631	155	248	10.6
70.	**TR.RSEL.70**	380	631	155	248	10.7
85.	**TR.RSEL.85**	380	638	155	255	10.8
85. (*R 240*)	**TR.RSEL.85.240**	380	638	155	255	10.8
100.	**TR.RSEL.100**	380	638	170	255	11.0
125.	–	–	–	–	–	–

Please order matching triflex® R e-chain® separately. 1) Max. retraction length. * Available upon request Delivery time upon request.

Product range | RSSL retraction system

Ø Index	Part No. RSEL	Retraction length[1] ≤ [mm]	A [mm]	B [mm]	C [mm]	Weight [kg]
30.	–	–	–	–	–	–
40.	–	–	–	–	–	–
50.	–	–	–	–	–	–
60.	**TR.RSSL.60**	350	631	126	228	10.6
65.	**TR.RSSL.65**	350	631	126	228	10.6
65. (*R 200*)	TR.RSSL.65.200*	350	631	155	248	10.6
70.	**TR.RSSL.70**	350	631	155	248	10.7
85.	**TR.RSSL.85**	350	638	155	255	10.8
85. (*R 240*)	**TR.RSSL.85.240**	350	638	155	255	10.8
100.	**TR.RSSL.100**	350	638	170	255	11.0
125.	–	–	–	–	–	–

Please order matching triflex® R e-chain® separately. 1) Max. retraction length. * Available upon request Delivery time upon request.

RSEL·RSSL retraction system

Installation dimensions

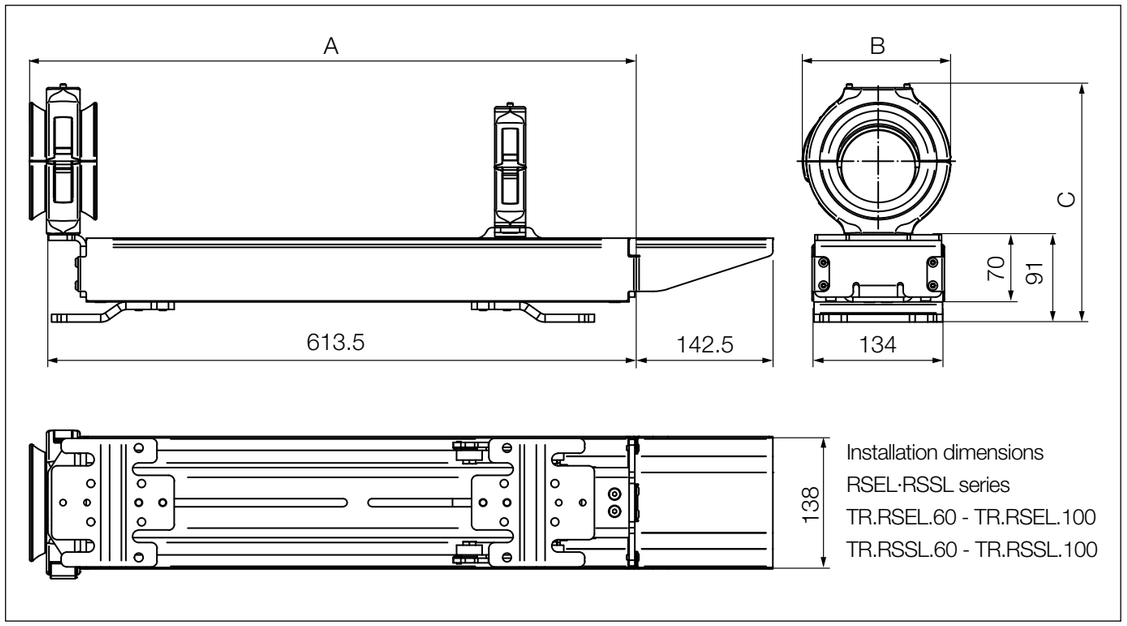

RSEL·RSSL e-chains®

Product range

Product range | Matching e-chains® for RSEL and RSSL

Ø Index	Part No. **TRC** enclosed	Part No. **TRE** "easy" design	Part No. **TRCF** with snap-lock mechanism
30.	–	–	–
40.	–	–	–
50.	–	–	–
60.	TRC.60.087.0	TRE.60.087.0.B	–
65.	–	–	TRCF.65.100.0
65. (*R 200*)	–	–	TRCF.65.200.0
70.	TRC.70.110.0	TRE.70.110.0.B	–
85.	TRC.85.135.0	TRE.85.135.0.B	TRCF.85.135.0
85. (*R 240*)	–	–	TRCF.85.240.0
100.	TRC.100.145.0	TRE.100.145.0.B	TRCF.100.145.0
125.	–	–	–

1) Available for B- and C-versions

Please note that all triflex® R e-chains® can be lengthened and shortened individually and can be customised to meet the needs of your application.

Please order e-chains® as piece parts and purchase a protector for each one.

Product range | Matching protectors for RSEL and RSSL

Ø Index	❶ Part No. Protector with screw fastener	❷ Part No. Protector with quick-lock fastener	Principle sketch protectors variants
30.	–	–	
40.	–	–	
50.	–	–	
60.	TR.60.10	TR.60.30	
65.	TR.65.10	TR.65.30	
65. (*R 200*)	–	–	
70.	TR.70.10	TR.70.30	
85.	TR.85.10	TR.85.30	
85. (*R 240*)	TR.85.240.10	–	
100.	TR.100.10	TR.100.30	More information about
125.	–	–	protectors ▶ Page 47

* Available upon request Delivery time upon request.

Please order protectors with screw connections or quick release as limit protectors.

RSEL·RSSL e-chains®

Cable length calculation

Calculation of the e-chain® total length | RSEL and RSSL e-chain®

Ø Index	Bend radius *R* [mm]	**Dimension A** [mm]	Principle sketch e-chains® total length	Direction **A1** **excess length**
30.	–	–	**Dimension A**	
40.	–	–		
50.	–	–	Direction **A6**	
60.	087	530	**additional length**	
65.	100	530		
65. (*R 200*)	200	530		
70.	110	530		
85.	135	530		
85. (*R 240*)	240	530		
100.	145	530		
125.	–	–		

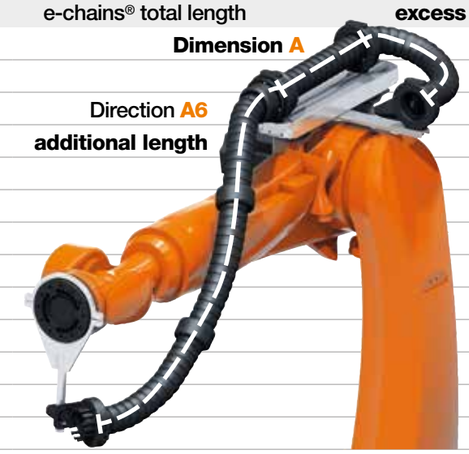

To calculate the e-chain® total length: please add the additional length **A1, the additional length A6** and the dimension **A**. Additionally, at least 1 limit protector must be ordered

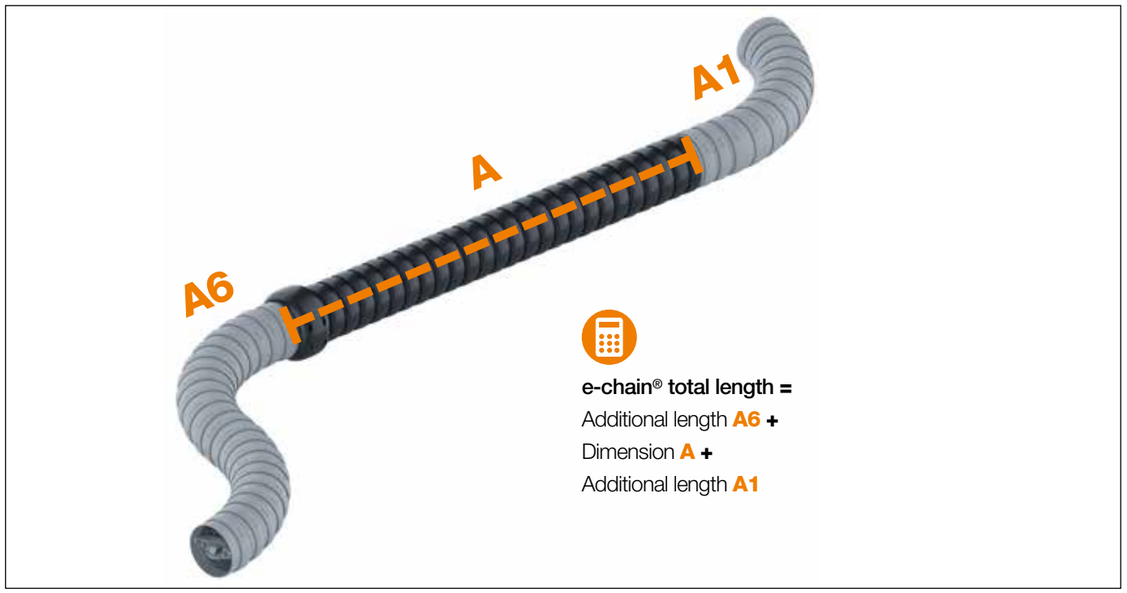

More information and installation dimensions | RSEL·RSSL e-chains®

- **TRC series** - closed design, chip protection, smooth outer contour ▶ **From page 28**
- **TRE series** - "easy" design, very easy to fill, simply press cables in ▶ **From page 30**
- **TRCF series** - closed design with snap-lock mechanism, chip protection, smooth outer contour ▶ **Page 32**

triflex® R accessories

Telescopic triflex® TRX

Video animation online: Please scan the QR code or visit
▶ www.igus.eu/TRX-animation

Parallel routing of the cables due to strain relief at the end and centre

Adjustable retraction force

Easy filling and replacement of cables

Defined torsion stop-dog

Adjustable retraction length

Telescopic and twistable combined in one e-chain® - triflex® TRX

The telescopic triflex® R TRX combines the triflex® R energy chain and a retraction system in one. The combination enables a space-saving installation with length extension of up 36%. The length extension also prevents loop formation at the robot. The round shape of the 'easy' design is highly resilient and makes it possible to insert and remove harnessed cables easily.

- The TRX complements the functions of the triflex® R series and now also makes them telescopic
- The rubber band inside the TRX retracts the e-chains® links back to their starting point and the retraction force can be adjusted via the rubber band
- Weight reduction of up to 83% compared to a solution with a retraction system (RSP)
- Minimises loop formation
- Space-saving design
- Easy to retrofit

reddot winner 2022

iF DESIGN AWARD 2022

Functional principle | triflex® R TRX

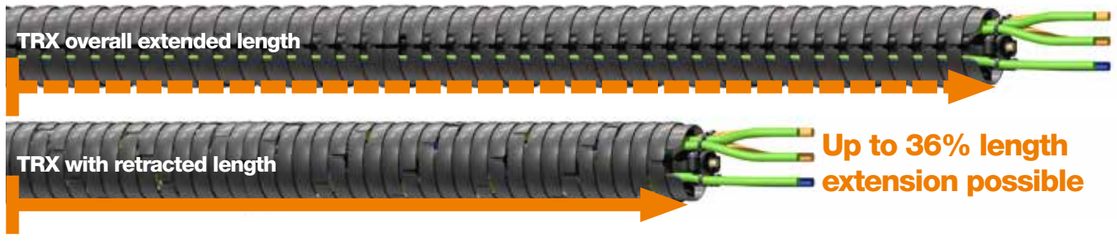

Product range

TRX version **01** | Installation dimensions | Product range

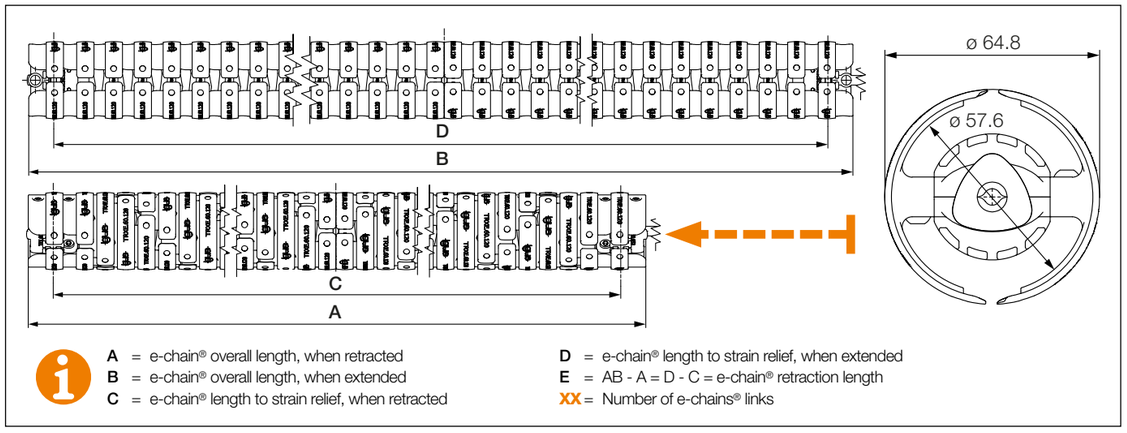

A = e-chain® overall length, when retracted
B = e-chain® overall length, when extended
C = e-chain® length to strain relief, when retracted
D = e-chain® length to strain relief, when extended
E = AB - A = D - C = e-chain® retraction length
XX = Number of e-chains® links

Installation dimensions depending on the number of links XX | Version 01, can be combined with TRE

XX Number of links* [piece]	A [mm]	B [mm]	C [mm]	D [mm]	Retraction length E [mm]	Weight [kg]
13	592	788	550	746	196	≈ 0.82
15	660	885	619	843	224	≈ 0.93
17	729	981	688	940	252	≈ 1.03
19	798	1,078	757	1,037	280	≈ 1.13
21	867	1,175	825	1,133	308	≈ 1.23
23	936	1,272	894	1,230	336	≈ 1.33
25	1,005	1,369	963	1,327	364	≈ 1.43
27	1,074	1,466	1,032	1,424	392	≈ 1.53
29	1,143	1.563	1,101	1,521	420	≈ 1.63
31	1,212	1,660	1,170	1,618	448	≈ 1.73
33	1,281	1,757	1,239	1,715	476	≈ 1.84
35	1,350	1,854	1.308	1.812	504	≈ 1.94
37	1,419	1,951	1,377	1.909	532	≈ 2.04
39	1.488	2,048	1,446	2,006	560	≈ 2.14
41	1,557	2,145	1,515	2,103	588	≈ 2.24
42	1,591	2,193	1,550	2.152	602	≈ 2.29

XX Number of left or right e-chains® links

Complete Part No. with required number of e-chains® links. Example: **TRXE.60.120.25.01.0**

Further amount of e-chains® links possible.

The TRX end piece version 01 enables an e-chain® extension **TRE.60.087.0.B**, which expands the range of applications.

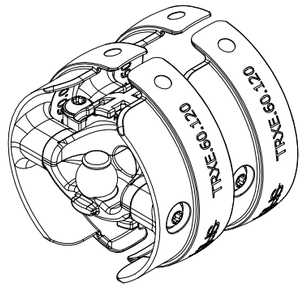

e-chain® order key

TRXE.60.120.25.01.0

- Default colour black
- End piece
- Number of e-chains® links
- *R* Bend radius
- ø index
- e-chains® series

Product range

TRX version **02** | Installation dimensions | Product range

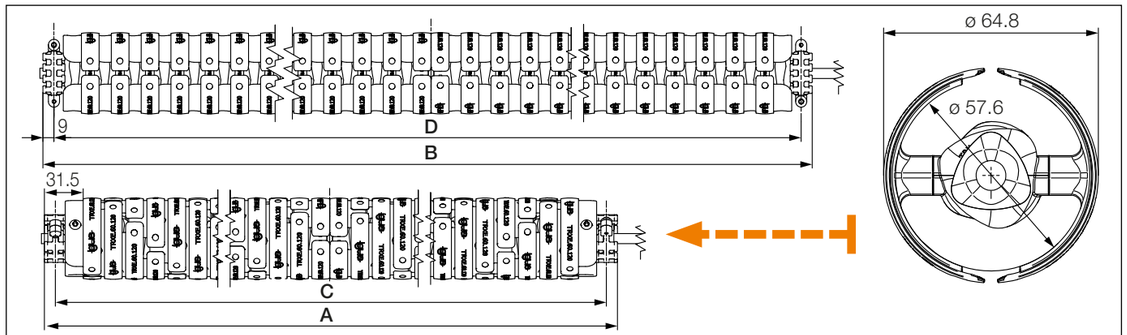

A = e-chain® overall length, when retracted
B = e-chain® overall length, when extended
C = e-chain® length to strain relief, when retracted
D = e-chain® length to strain relief, when extended
E = AB - A = D - C = e-chain® retraction length
XX = Number of e-chains® links

Installation dimensions depending on the number of links XX | Version 02, easy cable connection

XX Number of links* [piece]	A [mm]	B [mm]	C [mm]	D [mm]	Retraction length E [mm]	Weight [kg]
13	507	689	489	671	182	≈ 0.75
15	576	786	558	768	210	≈ 0.85
17	645	883	627	865	238	≈ 0.95
19	714	980	696	962	266	≈ 1.05
21	783	1,077	765	1,059	294	≈ 1.15
23	852	1,174	834	1,156	322	≈ 1.13
25	921	1,271	903	1,253	350	≈ 1.36
27	990	1,368	972	1,350	378	≈ 1.46
29	1,059	1,465	1,041	1,447	406	≈ 1.56
31	1,127	1,561	1,110	1,544	434	≈ 1.66
33	1,196	1,658	1,179	1,641	462	≈ 1.76
35	1,265	1.755	1,247	1,737	490	≈ 1.86
37	1,334	1,852	1,316	1,834	518	≈ 1.96
39	1,403	1,949	1,385	1,931	546	≈ 2.06
41	1,472	2,046	1,454	2,028	574	≈ 2.17
42	1,507	2,095	1,489	2,077	588	≈ 2.22

XX Number of left or right e-chains® links

Complete Part No. with required number of e-chains® links. Example: **TRXE.60.120.42.02.0**

Further amount of e-chains® links possible.

The end piece of the triflex® R TRX version 02 is a strain relief option for quick and easy attachment of cables and hoses.

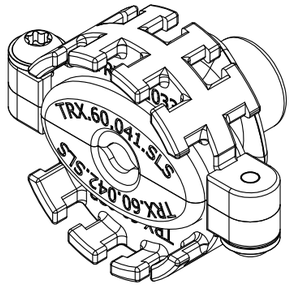

e-chain® order key

TRXE.60.120.42.02.0

- Default colour black
- End piece
- Number of e-chains® links
- *R* Bend radius
- ø index
- e-chains® series

Product range

TRX accessories | Compact connection to angled tube on axis 3

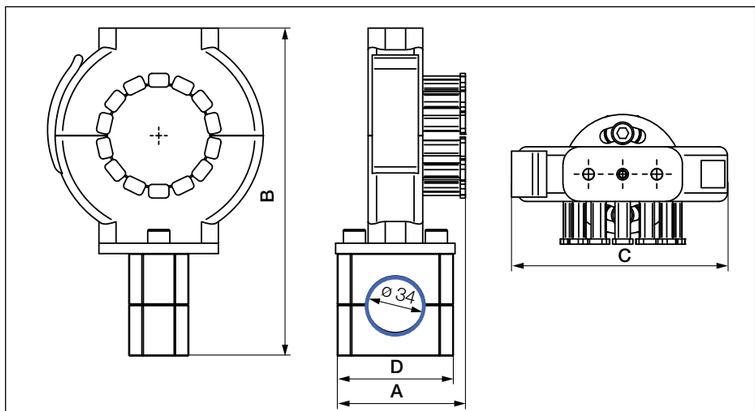

- With integrated strain relief tiewrap plates
- Space-saving
- Various adjustment options

Product range | Angled tube connection | For TRC.60·TRE.60·TRXE.60

Ø Index		Part No. Compact connection	A [mm]	B [mm]	C [mm]	D [mm]
60.	▶	**TR.920.237.60.01**	75	191.5	126	68

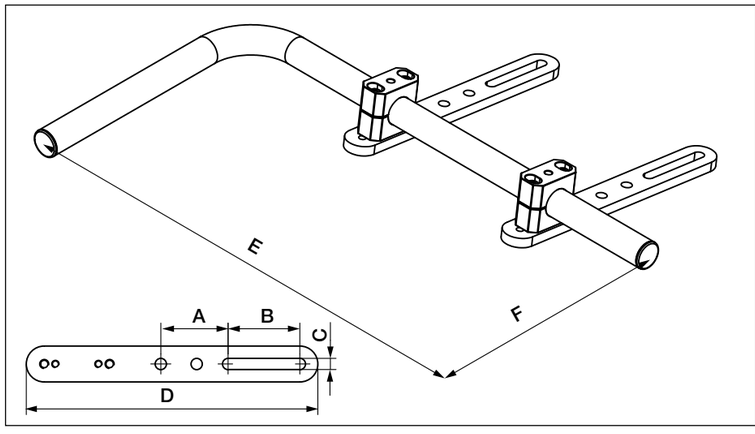

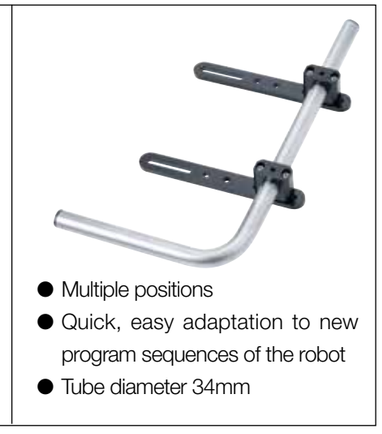

- Multiple positions
- Quick, easy adaptation to new program sequences of the robot
- Tube diameter 34mm

Product range | Angled tube with adapter consoles

Ø Index		Part No. Angled tube	A [mm]	B [mm]	C [mm]	D [mm]	E [mm]	F [mm]
60.	▶	**TR.912.099**	75	80	12.5	325	625	326

The compact connection **TR.920.237.60.01** in combination with the angled tube **TR.912.099** offers the greatest possible degree of freedom when connecting to the robot. The elongated holes in the adapter consoles of the angled tube enable direct attachment to a large number of robot models without additional adapters. In addition, the compact connection convinces with its space-saving design for an optimal connection point even in confined cells.

triflex® R accessories

Fibre-rod module and universal mounting kits

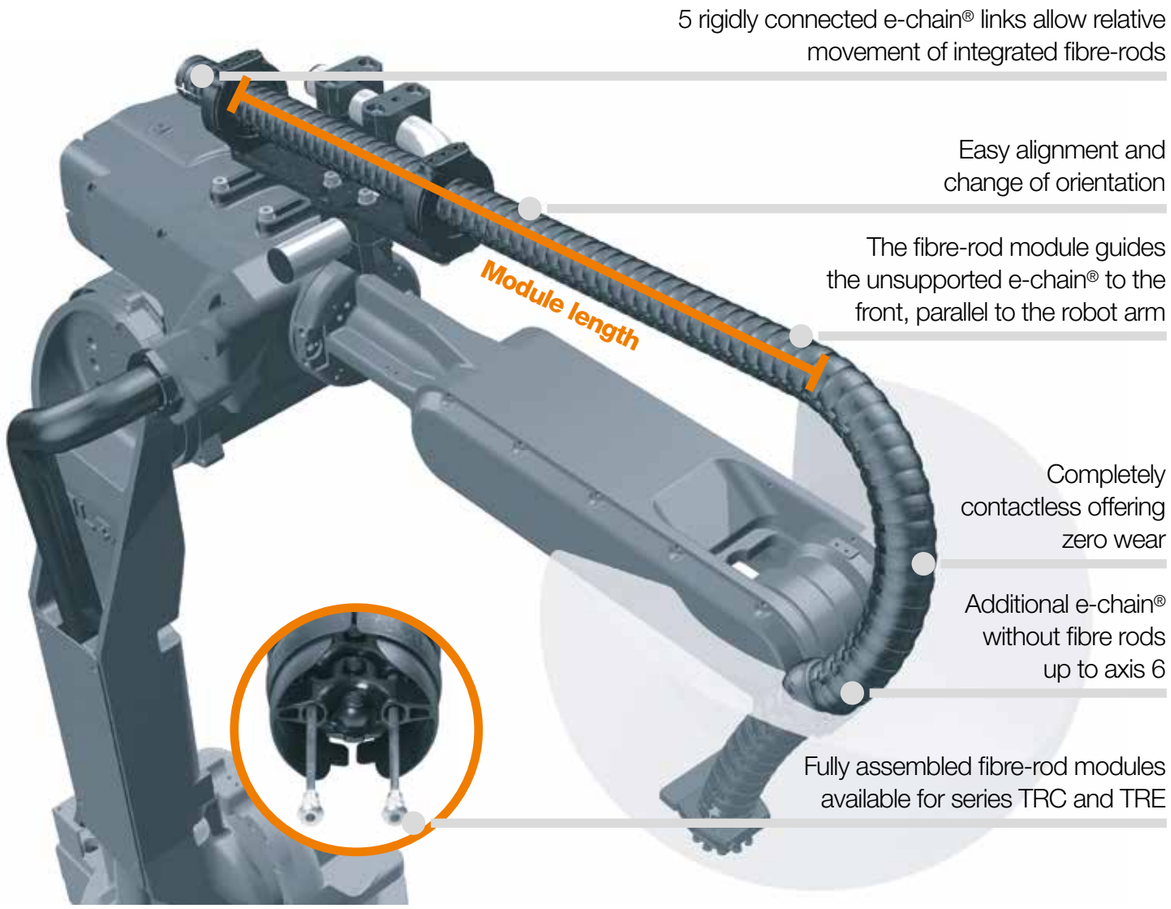

Fibre-rod modules for a directional pretension of the e-chain®

We supply fully assembled fibre-rod modules for triflex® R e-chain® Series TRC and TRE. The integrated fibre-rods generate a directional pretension for the e-chain®. This system creates a unique choice of movements for the energy supply system to the final axis of industrial robots. The fibre-rod module guides the unsupported e-chain® to the front, parallel to the robot arm. The bending properties of the modules depends on the installation orientation: only the front end allows flexible movement. The five rear e-chain® links are rigidly connected to allow relative movement of the integrated fibre-rods. This results in a fully contactless and therefore zero-wear energy supply system, designed for moderate movements with limited rotational motion of the axes. Additional e-chain® without fibre-rods for the final axis area needs to be ordered separately.

Assembly video online:
Please scan the QR code or visit
▶ www.igus.eu/assembly-fibre-rod-module

Product range

For TRC TRE series

Part No. fibre-rod modules for TRC / TRE		Length [m]
TRC.30	**TRE.30**	
TRC.F.30.0800.1.0	TRE.F.30.0800.1.0.B	≈ 0.8
TRC.F.30.0700.1.0	TRE.F.30.0700.1.0.B	≈ 0.7
TRC.F.30.0600.1.0*	TRE.F.30.0600.1.0.B*	≈ 0.6
TRC.F.30.0500.1.0	TRE.F.30.0500.1.0.B	≈ 0.5
TRC.F.30.0400.1.0	TRE.F.30.0400.1.0.B	≈ 0.4
TRC.F.30.0300.1.0	TRE.F.30.0300.1.0.B	≈ 0.3
TRC.40	**TRE.40**	
TRC.F.40.1000.1.0	TRE.F.40.1000.1.0.B	≈ 1.0
TRC.F.40.0900.1.0	TRE.F.40.0900.1.0.B	≈ 0.9
TRC.F.40.0800.1.0*	TRE.F.40.0800.1.0.B*	≈ 0.8
TRC.F.40.0700.1.0	TRE.F.40.0700.1.0.B	≈ 0.7
TRC.F.40.0600.1.0	TRE.F.40.0600.1.0.B	≈ 0.6
TRC.F.40.0500.1.0	TRE.F.40.0500.1.0.B	≈ 0.5
TRC.F.40.0400.1.0	TRE.F.40.0400.1.0.B	≈ 0.4
TRC.50	**TRE.50**	
TRC.F.50.1400.1.0	TRE.F.50.1400.1.0.B	≈ 1.4
TRC.F.50.1200.1.0	TRE.F.50.1200.1.0.B	≈ 1.2
TRC.F.50.1000.1.0*	TRE.F.50.1000.1.0.B*	≈ 1.0
TRC.F.50.0800.1.0	TRE.F.50.0800.1.0.B	≈ 0.8
TRC.F.50.0600.1.0	TRE.F.50.0600.1.0.B	≈ 0.6
TRC.F.50.0400.1.0	TRE.F.50.0400.1.0.B	≈ 0.4
TRC.60	**TRE.60**	
TRC.F.60.1400.1.0	TRE.F.60.1400.1.0.B	≈ 1.4
TRC.F.60.1200.1.0	TRE.F.60.1200.1.0.B	≈ 1.2
TRC.F.60.1000.1.0*	TRE.F.60.1000.1.0.B*	≈ 1.0
TRC.F.60.0800.1.0	TRE.F.60.0800.1.0.B	≈ 0.8
TRC.F.60.0600.1.0	TRE.F.60.0600.1.0.B	≈ 0.6
TRC.F.60.0400.1.0	TRE.F.60.0400.1.0.B	≈ 0.4

Part No. fibre-rod modules for TRC / TRE		Length [m]
TRC.70	**TRE.70**	
TRC.F.70.1800.1.0	TRE.F.70.1800.1.0.B	≈ 1.8
TRC.F.70.1600.1.0	TRE.F.70.1600.1.0.B	≈ 1.6
TRC.F.70.1400.1.0	TRE.F.70.1400.1.0.B	≈ 1.4
TRC.F.70.1200.1.0*	TRE.F.70.1200.1.0.B*	≈ 1.2
TRC.F.70.1000.1.0	TRE.F.70.1000.1.0.B	≈ 1.0
TRC.F.70.0800.1.0	TRE.F.70.0800.1.0.B	≈ 0.8
TRC.85	**TRE.85**	
TRC.F.85.2000.1.0	TRE.F.85.2000.1.0.B	≈ 2.0
TRC.F.85.1800.1.0	TRE.F.85.1800.1.0.B	≈ 1.8
TRC.F.85.1600.1.0	TRE.F.85.1600.1.0.B	≈ 1.6
TRC.F.85.1400.1.0*	TRE.F.85.1400.1.0.B*	≈ 1.4
TRC.F.85.1200.1.0	TRE.F.85.1200.1.0.B	≈ 1.2
TRC.F.85.1000.1.0	TRE.F.85.1000.1.0.B	≈ 1.0
TRC.F.85.0800.1.0	TRE.F.85.0800.1.0.B	≈ 0.8
TRC.100	**TRE.100**	
TRC.F.100.2000.1.0	TRE.F.100.2000.1.0.B/.C 1)	≈ 2.0
TRC.F.100.1800.1.0	TRE.F.100.1800.1.0.B/.C 1)	≈ 1.8
TRC.F.100.1600.1.0	TRE.F.100.1600.1.0.B/.C 1)	≈ 1.6
TRC.F.100.1400.1.0*	TRE.F.100.1400.1.0.B/.C 1)*	≈ 1.4
TRC.F.100.1200.1.0	TRE.F.100.1200.1.0.B/.C 1)	≈ 1.2
TRC.F.100.1000.1.0	TRE.F.100.1000.1.0.B/.C 1)	≈ 1.0
TRC.125	**TRE.125**	
TRC.F.125.2000.1.0	TRE.F.125.2000.1.0	≈ 2.0
TRC.F.125.1800.1.0*	TRE.F.125.1800.1.0*	≈ 1.8
TRC.F.125.1600.1.0	TRE.F.125.1600.1.0	≈ 1.6
TRC.F.125.1400.1.0	TRE.F.125.1400.1.0	≈ 1.4
TRC.F.125.1200.1.0	TRE.F.125.1200.1.0	≈ 1.2
TRC.F.125.1000.1.0	TRE.F.125.1000.1.0	≈ 1.0

*Maximum recommended length for fibre-rod modules 1) For die C version, add the .C index

Universal mounting kit | For TRC·TRE

● Stainless steel angle tube with attachment brackets ● Freely positionable ● The energy supply system can be quickly and easily adapted to new programming sequences of the robot ● With 2 mounting brackets for sizes 40 and 60 - with 3 mounting brackets starting at size 70

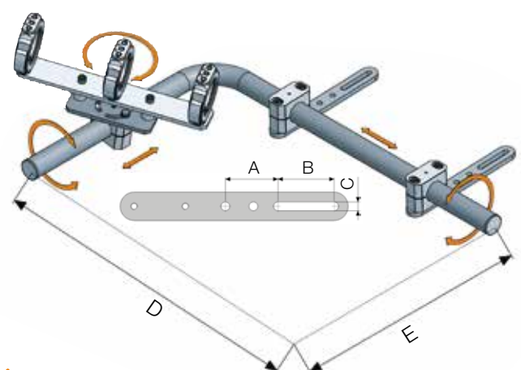

Ø Index	Part No.	A [mm]	B [mm]	C [mm]	D [mm]	E [mm]	Weight [kg]
40.	▶ **TR.40.80**	74	40	8.4	625	325	3.9
50.	▶ **TR.50.80**	74	40	8.4	625	325	3.9
60.	▶ **TR.60.80**	74	40	8.4	625	325	5.1
70.	▶ **TR.70.80**	75	80	12.6	875	575	13.2
85.	▶ **TR.85.80**	75	80	12.6	875	575	13.5
100.	▶ **TR.100.80**	75	80	12.6	875	575	13.5
125.	▶ **TR.125.80**	75	80	12.6	875	575	14.4

triflex® R accessories

Adjustment unit for retraction systems

Wide adjustment range of ± 250mm

Can be combined with igus® adapter consoles

Simplifies alignment for robot cells with restricted space

Part No. TR.907.595
weight: 5.0kg

Adjustment unit for RSP and RS retraction systems

The optional adjustment unit is installed between the robot arm and the retraction system, and allows accurate adjustments of the position of the igus® retraction system on the robot arm. Particularly useful for multiple working programs using the same cable package.

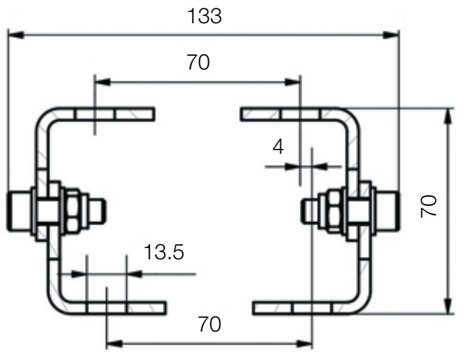

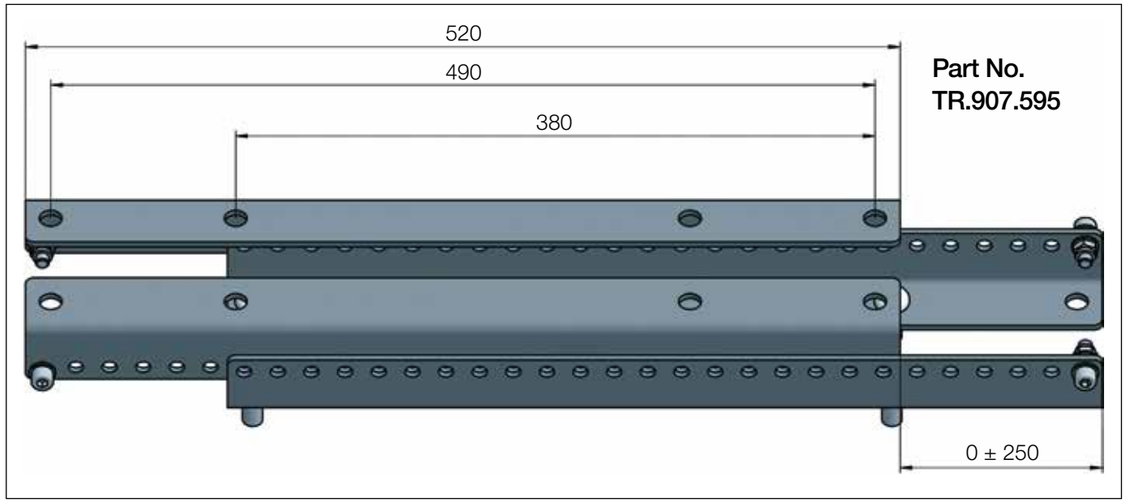

Adjustment unit to easily change the position of the retraction system

triflex® R accessories

Adapter consoles for retraction systems

Adapter consoles for many robot models, from stock

For all triflex® R retraction systems and fibre-rod modules

3D CAD data available online for download
▶ **www.igus.eu/consoles**

Also for robots needing side-mounted installation

Adapter consoles for all igus® retraction systems

The retraction systems provide all widely used drill patterns for attachment: 380 x 70mm and 490 x 90mm (in Ø 12.5mm). We also supply a wide range of manufacturer and model-dependent adapter brackets from stock, in order to adapt to other robot variations. For example, many robot models are equipped from the factory with only side-mounted mounting options - in these cases, our adapter product range also supports simple installation of the retraction systems without additional engineering.
Adapter consoles for many robot models, from stock. Product range ▶ next page

Application example with RS system on ABB Series 6600

Product range

Adapter consoles for retraction systems, from stock

Adapter consoles	Part No.	Manufacturer	Robot model	Weight [kg]
	TR.907.347	**ABB**	IRB 6600 IRB 6640 IRB 6650	4.0
	TR.907.468	**ABB**	IRB 6400	9.8
	TR.907.448	**ABB**	IRB 4400	5.0
	TR.907.381	**ABB**	IRB 2400/10 IRB 2400/16	5.2
	TR.907.905	**ABB**	IRB 6620	2.8
	TR.908.494	**ABB**	IRB 4600 IRB 2600	2.9
	TR.907.374	**Comau**	NH1 130-2.6 NH3 165-2.7 NH3 220-2.7 NJ 110-3.0 NJ 110-2.6 SMART5 NJ 165 3.0	4.7
	TR.907.447	**Comau**	NM 45-2.0 NM 16-3.1	3.4
	TR.908.493	**Comau**	Smart six	2.2
	TR.907.327	**Yaskawa**	UP 20 UP 50 UP 130 UP 165 ES 165 ES 200 ES 280 HP 20 HP 50 MH6 HP 165	3.6
	TR.909.641	**Yaskawa**	MH50	2.0

More adapter consoles upon request. CAD data online.

Product range

Excerpt from the product range

Adapter consoles	Part No.	Manufacturer	Robot model	Weight [kg]
	TR.911.220	**Fanuc**	M-710iC 50 M-710iC 70	2.0
	TR.908.973	**Fanuc**	M-710iB 45	1.1
	TR.907.270	**Fanuc**	IR-2000iB R-2000iA R-1000iA S 430 S 420	4.5
	TR.907.470.12	**Fanuc**	M-900iA 260L M-900iA 350	6.8
	TR.907.902.12	**Fanuc**	M-900iA 600	8.9
	TR.910.876	**Fanuc**	M900-IB700	4.6
	TR.907.599	**KUKA**	KR5 KR5arc KR6 KR16	2.5
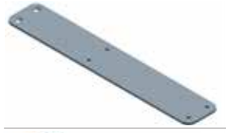	TR.908.113	**KUKA**	KR-1000	5.2
	TR.908.014	**KUKA**	KR 60 (HA) KR 30 (HA)	4.3
	TR.907.706	**Reis**	RV30-26 RV10-16 RV20-16 RV60-16 RV60-26 RV60-40 RV60-60 RV130	4.3
	TR.911.223 Spacer bolt	**KUKA**	Series Quantec (4 piece kit)	0.6

More adapter consoles upon request. CAD data online.

triflex® R accessories

Clamps for attachment to axis 6

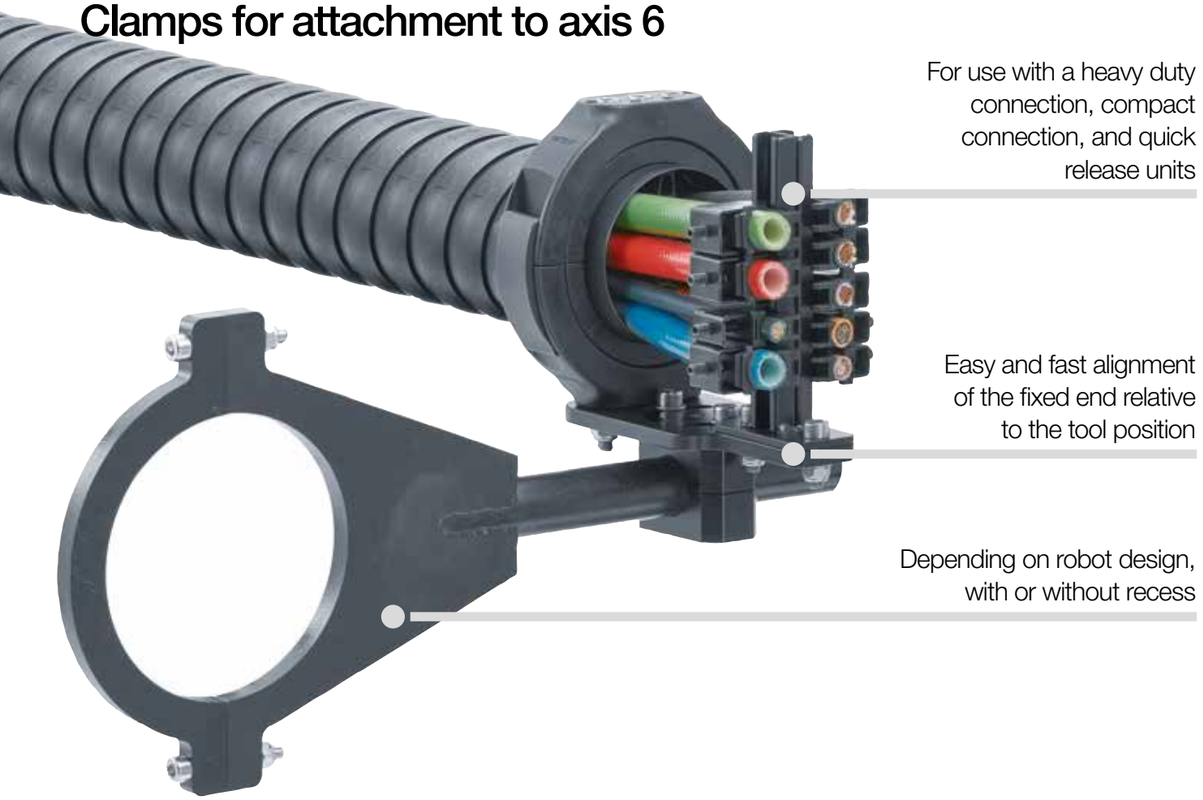

Clamps for attachment to axis 6

The clamp is used to attach a mounting bracket to axis 6, with a bar (Ø 30mm) for all robots. They are easy and quick to assemble.

- For use with heavy duty connection **TR.XX.20.30** / **TR.XX.23.30**
- For use with compact connection **TR.XX.21.01.30** / **TR.XX.21.02.30**
- For use with quick exchange unit **TR.XX.22.30**

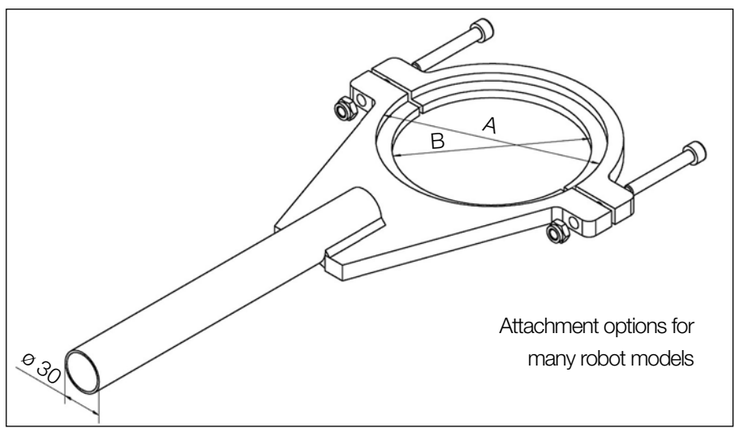

Product range

Excerpt from the product range

Part No. Clamp	Robot model	With recess	A [mm]	B [mm]	Weight [kg]
TR.907.857	KUKA KR 30-3 (HA)	yes	130	115	1.90
	KUKA KR 60-3 (HA)	yes	130	115	1.90
	KUKA KR 60 L45-3 (HA)	yes	130	115	1.90
	KUKA KR 60 L30-3 (HA)	yes	130	115	1.90
TR.907.901	KUKA Quantec, large flange	yes	205	190	2.50
	KUKA Quantec-2, large flange	yes	205	190	2.50
	KUKA KR 125/3	yes	205	190	2.50
	KUKA KR 150/3	yes	205	190	2.50
	KUKA KR 200/3	yes	205	190	2.50
	KUKA KR 150/2 Serie 2000	yes	205	190	2.50
	KUKA KR 180/2 Serie 2000	yes	205	190	2.50
	KUKA KR 210/2 Serie 2000	yes	205	190	2.50
TR.907.992	Fanuc R-2000iA	yes	165	160	2.40
	Fanuc R-2000iB	yes	165	160	2.40
	Fanuc R-2000iC	yes	165	160	2.40
TR.908.065	Fanuc M-710iC 50	yes	130	124	2.20
	Fanuc M-710iC 70	yes	130	124	2.20
TR.908.115	KUKA KR 1000 Titan	yes	250	242	3.05
TR.908.347	Stäubli TX 200	yes	145	125	1.90
TR.909.387	Yaskawa UP 50	yes	125	100	1.90
	Yaskawa HP 50	yes	125	100	1.90
	Yaskawa MH 50	yes	125	100	1.90
TR.912.328	KUKA Fortec	yes	235	220	2.70
TR.917.378	KUKA KR 16-3	yes	90	63	1.20
	KUKA KR 20-3	yes	90	63	1.20
TR.919.171	KUKA Iontec	yes	122	145	1.80
TR.907.667.140	KUKA Quantec, small flange	no	140	similar to A	2.20
	KUKA Quantec-2, small flange	no	140	similar to A	2.20
TR.907.667.142	Hyundai HX 165	no	142	similar to A	2.25
TR.907.667.150	Comau NJ 130	no	150	similar to A	2.40
TR.907.667.160	ABB IRB 6400	no	160	similar to A	2.45
	Yaskawa GP180	no	160	similar to A	2.45
TR.907.667.180	Yaskawa GP250	no	180	similar to A	2.55
TR.907.667.190	Comau NH3	no	190	similar to A	2.60
TR.907.667.200	ABB IRB 6640	no	200	similar to A	2.70
	ABB IRB 6620	no	200	similar to A	2.70
	ABB IRB 6650	no	200	similar to A	2.70
	ABB IRB 6700	no	200	similar to A	2.70
TR.907.667.220	KUKA KR 360-2	no	220	similar to A	2.82
	KUKA KR 500-2	no	220	similar to A	2.82
	KUKA KR 360-3	no	220	similar to A	2.82
	KUKA KR 500-3	no	220	similar to A	2.82
TR.907.667.250	ABB IRB 7600	no	250	similar to A	3.50
	Fanuc M900iA 350	no	250	similar to A	3.20
	Fanuc M900iA 260L	no	250	similar to A	3.20
TR.907.667.275	Fanuc M900iA 200P	no	275	similar to A	3.40
TR.907.667.315	Fanuc M900iA 600	no	315	similar to A	3.60
	Fanuc M900iA 400L	no	315	similar to A	3.60
TR.918.002	Universal Robot UR10(e)	no	90	similar to A	0.25
TR.918.012	Universal Robot UR5(e)	no	75	similar to A	0.23
TR.918.027	Universal Robot UR3(e)	no	63	similar to A	0.20

Other dimensions available upon request

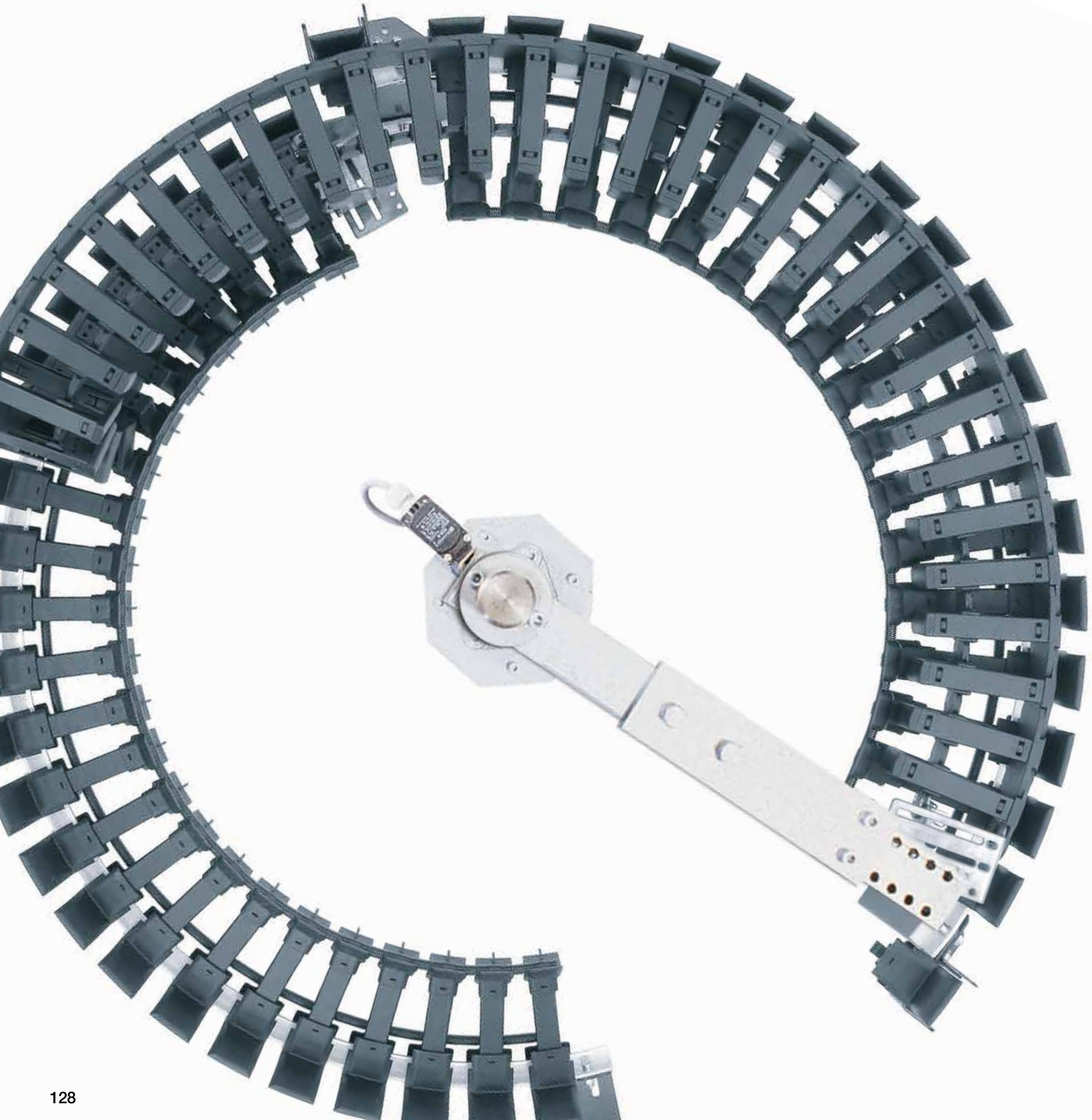

e-chains® solutions for axis 1

Circular and rotary movements

Swivel bracket for triflex® R | twisterchain | twisterband | Rotary energy supply systems with reverse bend radius *RBR* |

triflex® R accessories

Swivel bracket - for axis 1

Swivel bracket - robot rotation up to 270°

The triflex® R swivel bracket is a cost-effective solution for implementing the rotary movement on the 1st axis of an industrial robot. Rotary movements of up to 270° can be implemented. Due to the slim and space-saving design, this system can also be used in very tight installation spaces. The use of lubrication-free bearings also makes this system low-maintenance and environmentally friendly.

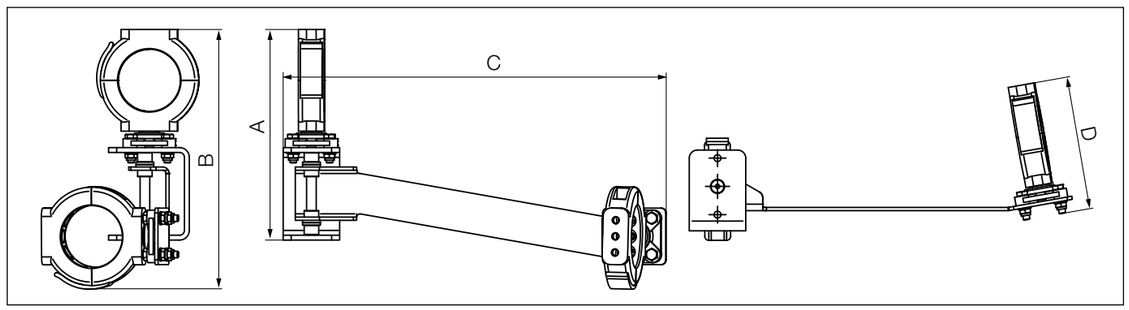

Ø Index	Part No. Swivel bracket	A [mm]	B [mm]	C [mm]	D [mm]
30.	–	–	–	–	–
40.	TR.918.837.40	220	256	474	124
50.	TR.918.837.50	220	256	474	124
60.	TR.907.835.60	261	321	474	165
65.	TR.907.835.65	261	321	474	165
65. (R 200)	TR.907.835.65.200	261	321	474	165
70.	TR.907.835.70	261	321	474	165
85.	TR.907.835.85	288	352	474	192
85. (R 240)	TR.907.835.85.240	288	352	474	192
100.	TR.907.835.100	288	352	474	192

Product range

Adapter for swivel bracket - for different types of robots

Adapter consoles	Part No.	Manufacturer	Robot model	Weight [kg]
	TR.917.615	**ABB**	ABB IRB 4600 ABB IRB 6700	1.3
	TR.917.979	**ABB**	ABB IRB 7600	3.1
	TR.919.632	**ABB**	ABB IRB 6620	2.2
	TR.920.294	**ABB**	ABB IRB 5710 ABB IRB 5720	0.8
	TR.917.981	**Fanuc**	Fanuc R2000iB	2.0
	TR.918.817	**Fanuc**	Fanuc R2000iC	3.1
	TR.919.541	**Fanuc**	M-710iC/45M M-710iC/50 M-710iC/70	0.8
	TR.918.097	**KUKA**	KUKA Quantec	0.9
	TR.918.735	**KUKA**	KUKA Fortec	1.1
	TR.918.766	**KUKA**	KUKA Quantec-2	3.2
	TR.919.126	**KUKA**	KUKA Iontec	1.1

twisterchain advantages

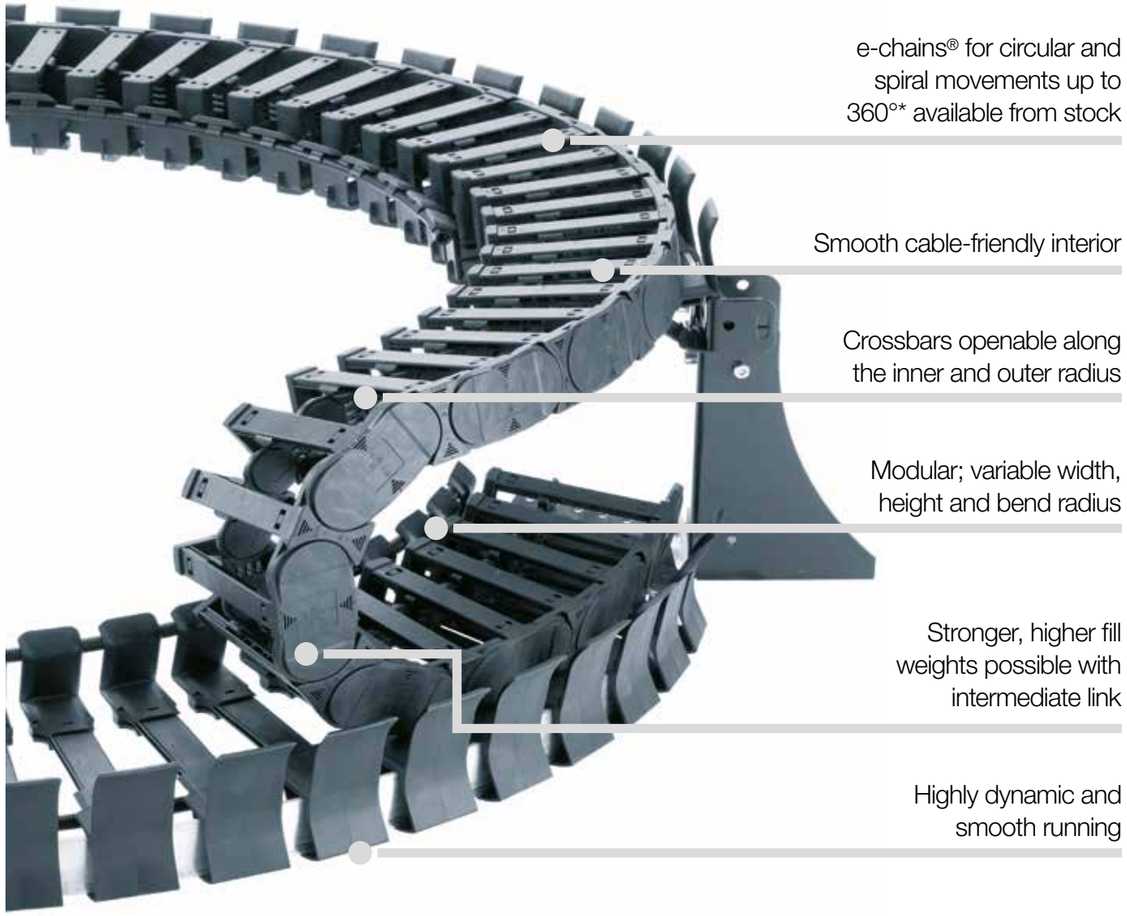

Strong, quiet and up to 360° - circular and spiral movements - twisterchain

The igus® twisterchain product line offers an extensive range of products for circular movement and is available in four sizes. Its modular width and radius design ensures it can be used flexibly in applications with rotary and spiral movements up to 360° and more, with high fill weights and where smooth operation is required. twisterchain applications are available with modular guide troughs which offer: e-chain® guidance, reduced e-chain® wear, optimal levels of smooth operation, angle of rotations up to 360° from stock.

- Strong, high fill weights, smooth operation, weight-optimised
- Rotary speeds up to 1m/s and more
- Circular/spiral movements up to 360° from stock (up to 400° upon request)
- Cable-friendly, smooth interior ● Crossbars openable along the inner and outer radius
- Successfully tested for over 1 million cycles in the igus® laboratory

e-chains® for circular movements up to 360° available from stock (up to 400° upon request)

UL94-V0 classification upon request

Selection table

Series	Inner height *hi* [mm]	Inner width *Bi* [mm]	Outer width *Ba* [mm]	Outer height *ha* [mm]	Bend radius *R* [mm]	Circular radii *AR* [mm]	Page
TC32	32	87.5 - 150	108.5 - 171	54	100 - 250	400 - 600	136
TC42	42	87.5 - 200	110.5 - 223	64	100 - 250	400 - 850	138
TC56	56	125 - 200	155 - 230	84	150 - 400	650 - 850	140

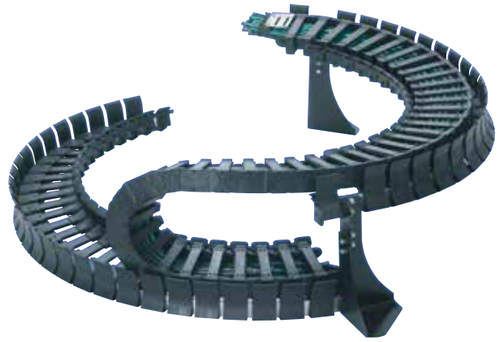

twisterchain
for rotary movements up to 360° available from stock; for angle of rotation >360° please contact us. Crossbars removable along the inner and outer radius

The complete product range with ordering options,
D CAD, configurators, PDF and application examples ▶ www.igus.eu/twisterchain

Available from stock. Ready to ship in 3 - 5 business days*

*Average time before the ordered goods are dispatched.

Quickly generate complete twisterchain 3D CAD models

- Get complete 3D models just by inputting the angle of rotation and basic dimensions
- Free positioning of the e-chain® moving end along the travel length
- Optional generation of twisterchain as a single part or complete with guide trough and base support
- Fast download of the CAD data without registration
- 11 different 3D and 8 different 2D CAD formats are available

More information ▶ www.igus.eu/twister-configurator

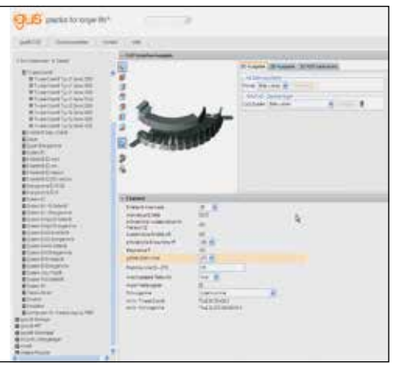

twisterchain

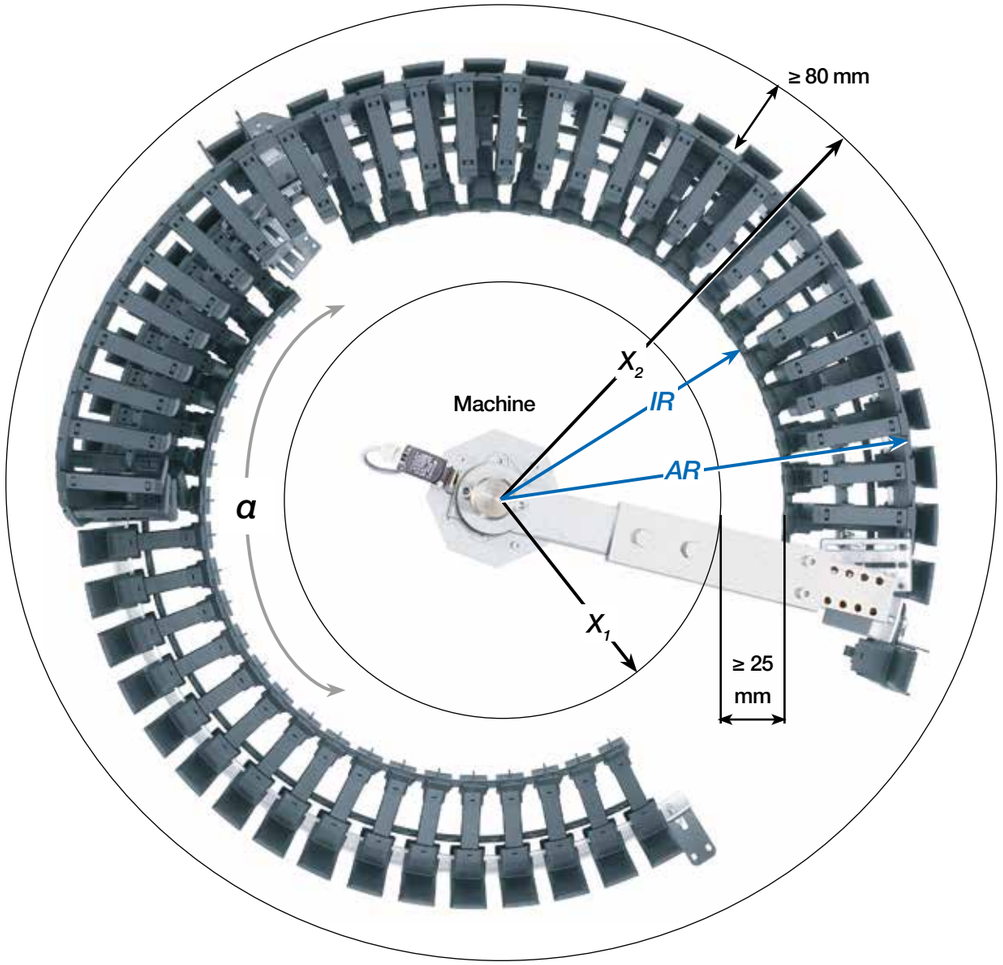

twisterchain general information

In the case of machines that travel in a circular movement both to the left and to the light, the total angle of rotation is calculated by adding the two angles.

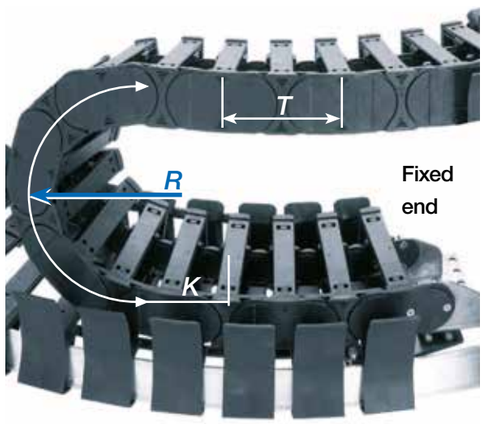

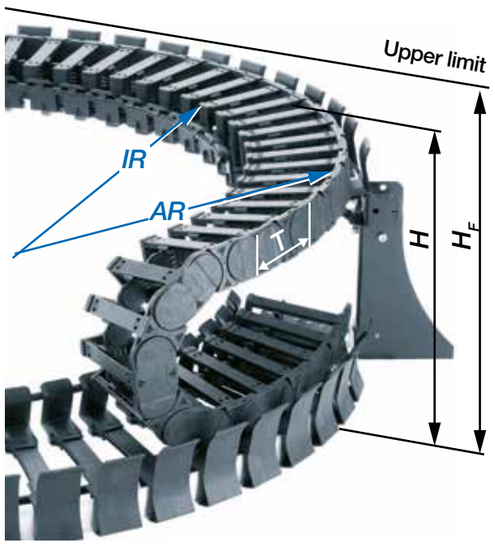

Technical data

Technical data

Speed / acceleration	upon request
Material - permitted temperature °C, igumid G	**-40°C/+120°C**
Flammability class, igumid G	**VDE 0304 IIC UL94-HB**

Order example | Order key

Order example for complete e-chain® (1.0m), colour black, with mounting brackets:

e-chain® (1.0m)	Please indicate e-chain® length or odd* number of links: 1.0m or 11 links	**TC56.12.250/650.0**
+ Mounting brackets	1 set	**TC5600.34.VS.E**
Order text:	**1m TC56.12.250/650.0 + TC5600.34.VS.E**	

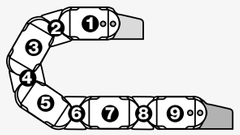

***Important note:**
twisterchain e-chains® must always start and end on an outer side link (odd number of links). An outer side link should always be the first link at the moving end.

Order key TC56.12.250/650.0

- Series
- Inner height
- Width index (depends on *Bi*)
- Bend radius *R*
- Outer radius *AR*
- Standard colour black

TC56.12.250/650.0 =
e-chain® openable along the inner radius, from both sides
Bi 12mm inner width, *R* 250mm bend radius / *AR* 650mm outer radius, colour black

AR = Outer radius e-chain®
IR = Inner radius e-chain®
R = Bend radius e-chain®
X_1 = Inner machine limit
X_2 = Outer machine limit
T = Pitch
H_F = e-chain® height incl. 50mm clearance
H = e-chain® height
K = Add-on for bend radius
hi = Inner height e-chain®
ha = Outer height e-chain®
α = Angle of rotation

twisterchain TC32

32mm inner height - product range

AR [mm]	Bi [mm]	Ba [mm]	X_2 [mm]	X_1 [mm]	R 100 [mm] TC32 ...	R 125 [mm] TC32 ...	R 150 [mm] TC32 ...	R 175 [mm] TC32 ...	R 200 [mm] TC32 ...	R 250 [mm] TC32 ...	TC32 [kg/m]
400	87.5	108.5	480	270	087.100/400	087.125/400	087.150/400	087.175/400	087.200/400	087.250/400	≈ 1.82
400	100	121	480	250	–	–	10.150/400	10.175/400	10.200/400	10.250/400	≈ 1.90
400	108	129	480	250	–	–	–	11.175/400	11.200/400	11.250/400	≈ 1.95
400	125	146	480	220	–	–	–	12.175/400	12.200/400	12.250/400	≈ 2.05
400	137.5	158.5	480	210	–	–	–	–	–	137.250/400	≈ 2.13
400	150	171	480	200	–	–	–	–	–	15.250/400	≈ 2.21
500	100	121	580	350	10.100/500	10.125/500	10.150/500	10.175/500	10.200/500	10.250/500	≈ 1.90
500	108	129	580	350	–	11.125/500	11.150/500	11.175/500	11.200/500	11.250/500	≈ 1.95
500	125	146	580	320	–	12.125/500	12.150/500	12.175/500	12.200/500	12.250/500	≈ 2.05
500	137.5	158.5	580	310	–	–	137.150/500	137.175/500	137.200/500	137.250/500	≈ 2.13
500	150	171	580	300	–	–	15.150/500	15.175/500	15.200/500	15.250/500	≈ 2.21
600	108	129	680	450	11.100/600	11.125/600	11.150/600	–	–	–	≈ 1.95
600	125	146	680	420	–	12.125/600	12.150/600	12.175/600	12.200/600	12.250/600	≈ 2.05
600	137.5	158.5	680	410	–	137.125/600	137.150/600	137.175/600	137.200/600	137.250/600	≈ 2.13
600	150	171	680	400	–	–	15.150/600	15.175/600	15.200/600	15.250/600	≈ 2.21

R	100	125	150	175	200	250
H^{+20}_{0}	254	304	354	404	454	554
K	465	550	620	700	780	940

Pitch [mm/link]	56
Links/m	18
corresponds to[mm]	1,008

twisterchain 2nd generation from igus® - successfully tested for over 1 million cycles in the igus® laboratory

Installation dimensions

Dimension A1 dependent on outer radius *AR*

AR [mm]	R 100 A1 [mm]	R 125 A1 [mm]	R 150 A1 [mm]	R 175 A1 [mm]	R 200 A1 [mm]	R 250 A1 [mm]
400	51	51	52	53	53	58
500	65	65	66	67	69	71
600	79	80	81	81	82	85

Dimension A1 always with tolerance of ± 2.5mm

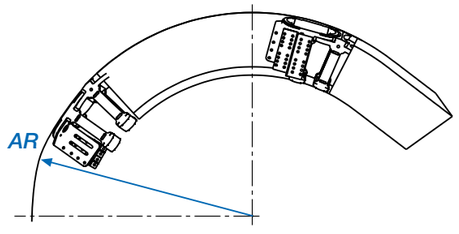

Note: Outer radius *AR* (see drawing) determines dimension **A1**!

Intermediate link

The cable-friendly intermediate link increases the strength and stability of twisterchain many times over. It also serves as interior separation, dividing the filling space into two chambers. **Outer radius *AR* determines dimension A1.**

Dimensions

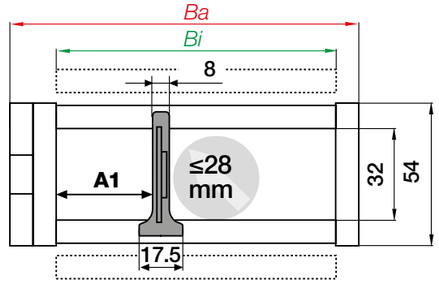

Serie TC32 | Additional parameters dependent on outer radius *AR*

AR [mm]	Max. fill weight α 0° - 180° [kg]	Max. fill weight α 180° - 360° [kg]	Max. V [m/s]	Max. a [m/s²]
400	4.0	2.0	1.0	2.0
500	4.0	2.0	1.0	2.0
600	4.0	2.0	1.0	2.0

Series TC32 | Interior separation

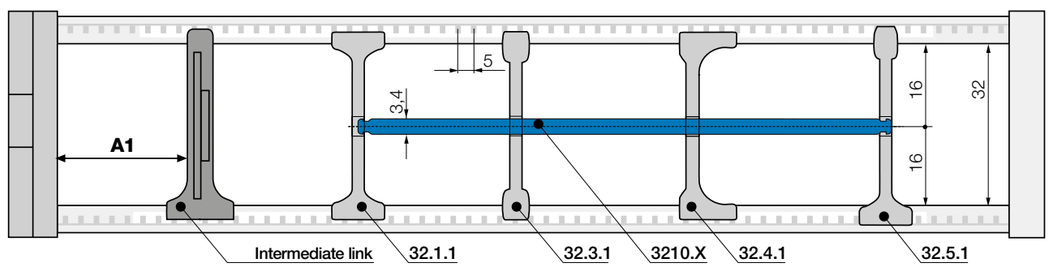

For this series the interior separation products for series E4.32 may be used ▶ www.igus.eu/E4.32

AR = Outer radius e-chain®
IR = Inner radius e-chain®
R = Bend radius e-chain®
X_1 = Inner machine limit
X_2 = Outer machine limit
A1 = Intermediate link position
H = Nominal clearance height
K = Add-on for bend radius
T = Pitch

twisterchain TC42

42mm inner height - product range

AR [mm]	Bi [mm]	Ba [mm]	X_2 [mm]	X_1 [mm]	R 100 [mm] TC42 ...	R 125 [mm] TC42 ...	R 150 [mm] TC42 ...	R 175 [mm] TC42 ...	R 200 [mm] TC42 ...	R 250 [mm] TC42 ...	TC42 [kg/m]
400	87.5	110.5	480	270	087.100/400	087.125/400	087.150/400	087.175/400	087.200/400	087.250/400	≈ 1.97
400	100	123	480	250	10.100/400	10.125/400	10.150/400	10.175/400	10.200/400	10.250/400	≈ 2.03
400	108	131	480	250	–	11.125/400	11.150/400	11.175/400	11.200/400	11.250/400	≈ 2.07
400	125	148	480	220	–	12.125/400	12.150/400	12.175/400	12.200/400	12.250/400	≈ 2.16
400	137.5	160.5	480	210	–	137.125/400	137.150/400	137.175/400	137.200/400	137.250/400	≈ 2.22
400	150	173	480	200	–	–	–	15.175/400	15.200/400	15.250/400	≈ 2.29
400	162.5	185.5	480	190	–	–	–	–	162.200/400	162.250/400	≈ 2.35
400	168	191	480	190	–	–	–	–	–	17.250/400	≈ 2.38
400	175	198	480	180	–	–	–	–	–	18.250/400	≈ 2.41
500	100	123	580	350	10.100/500	10.125/500	10.150/500	10.175/500	10.200/500	10.250/500	≈ 2.03
500	108	131	580	350	–	11.125/500	11.150/500	11.175/500	11.200/500	11.250/500	≈ 2.07
500	125	148	580	320	–	12.125/500	12.150/500	12.175/500	12.200/500	12.250/500	≈ 2.16
500	137.5	160.5	580	310	–	–	137.150/500	137.175/500	137.200/500	137.250/500	≈ 2.22
500	150	173	580	300	–	–	15.150/500	15.175/500	15.200/500	15.250/500	≈ 2.29
500	162.5	185.5	580	290	–	–	162.150/500	162.175/500	162.200/500	162.250/500	≈ 2.35
500	168	191	580	290	–	–	–	17.175/500	17.200/500	17.250/500	≈ 2.38
500	175	198	580	280	–	–	–	–	18.200/500	18.250/500	≈ 2.41
500	187.5	210.5	580	280	–	–	–	–	187.200/500	187.250/500	≈ 2.48
500	200	223	580	250	–	–	–	–	20.200/500	20.250/500	≈ 2.54
600	108	131	680	450	11.100/600	11.125/600	11.150/600	11.175/600	11.200/600	–	≈ 2.07
600	125	148	680	420	12.100/600	12.125/600	12.150/600	12.175/600	12.200/600	12.250/600	≈ 2.16
600	137.5	160.5	680	410	137.100/600	137.125/600	137.150/600	137.175/600	137.200/600	137.250/600	≈ 2.22
600	150	173	680	400	15.100/600	15.125/600	15.150/600	15.175/600	15.200/600	15.250/600	≈ 2.29
600	162.5	185.5	680	390	–	162.125/600	162.150/600	162.175/600	162.200/600	162.250/600	≈ 2.35
600	168	191	680	390	–	–	17.150/600	17.175/600	17.200/600	17.250/600	≈ 2.38
600	175	198	680	380	–	–	18.150/600	18.175/600	18.200/600	18.250/600	≈ 2.41
600	187.5	210.5	680	380	–	–	187.150/600	187.175/600	187.200/600	187.250/600	≈ 2.48
600	200	223	680	350	–	–	20.150/600	20.175/600	20.200/600	20.250/600	≈ 2.54
650	125	148	730	470	12.100/650	12.125/650	12.150/650	12.175/650	12.200/650	12.250/650	≈ 2.16
650	137.5	160.5	730	460	137.100/650	137.125/650	137.150/650	137.175/650	137.200/650	137.250/650	≈ 2.22
650	150	173	730	450	15.100/650	15.125/650	15.150/650	15.175/650	15.200/650	15.250/650	≈ 2.29
650	162.5	185.5	730	440	–	162.125/650	162.150/650	162.175/650	162.200/650	162.250/650	≈ 2.35
650	168	191	730	430	–	17.125/650	17.150/650	17.175/650	17.200/650	17.250/650	≈ 2.38
650	175	198	730	430	–	–	18.150/650	18.175/650	18.200/650	18.250/650	≈ 2.41
650	187.5	210.5	730	420	–	–	187.150/650	187.175/650	187.200/650	187.250/650	≈ 2.48
650	200	223	730	400	–	–	20.150/650	20.175/650	20.200/650	20.250/650	≈ 2.54
750	137.5	160.5	830	560	137.100/750	137.125/750	137.150/750	137.175/750	137.200/750	137.250/750	≈ 2.22
750	150	173	830	550	15.100/750	15.125/750	15.150/750	15.175/750	15.200/750	15.250/750	≈ 2.29
750	162.5	185.5	830	540	–	162.125/750	162.150/750	162.175/750	162.200/750	162.250/750	≈ 2.35
750	168	191	830	540	–	17.125/750	17.150/750	17.175/750	17.200/750	17.250/750	≈ 2.38
750	175	198	830	530	–	18.125/750	18.150/750	18.175/750	18.200/750	18.250/750	≈ 2.41
750	187.5	210.5	830	520	–	187.125/750	187.150/750	187.175/750	187.200/750	187.250/750	≈ 2.48
750	200	223	830	500	–	20.125/750	20.150/750	20.175/750	20.200/750	20.250/750	≈ 2.54
850	150	173	930	650	15.100/850	15.125/850	15.150/850	15.175/850	15.200/850	15.250/850	≈ 2.29
850	162.5	185.5	930	640	162.100/850	162.125/850	162.150/850	162.175/850	162.200/850	162.250/850	≈ 2.35
850	168	191	930	630	17.100/850	17.125/850	17.150/850	17.175/850	17.200/850	17.250/850	≈ 2.38
850	175	198	930	630	–	18.125/850	18.150/850	18.175/850	18.200/850	18.250/850	≈ 2.41
850	187.5	210.5	930	620	–	187.125/850	187.150/850	187.175/850	187.200/850	187.250/850	≈ 2.48
850	200	223	930	600	–	20.125/850	20.150/850	20.175/850	20.200/850	20.250/850	≈ 2.54

R	100	125	150	175	200	250
H^{-0}_{+25}	267	317	367	417	467	567
K	500	650	725	800	875	1,050

Pitch [mm/link]	67
Links/m	15
corresponds to[mm]	1,005

Installation dimensions

Dimension A1 dependent on outer radius *AR*

AR [mm]	R 100 A1 [mm]	R 125 A1 [mm]	R 150 A1 [mm]	R 175 A1 [mm]	R 200 A1 [mm]	R 250 A1 [mm]
400	49	50	51	53	54	58
500	64	65	66	67	68	71
600	79	79	80	81	82	85
650	86	87	87	88	89	92
750	101	101	102	103	104	106
850	116	116	117	118	118	120

Dimension A1 always with tolerance of ± 2.5mm

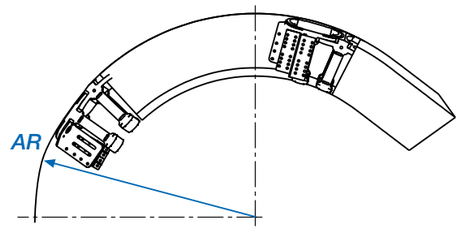

Note: Outer radius *AR* (see drawing) determines dimension **A1**!

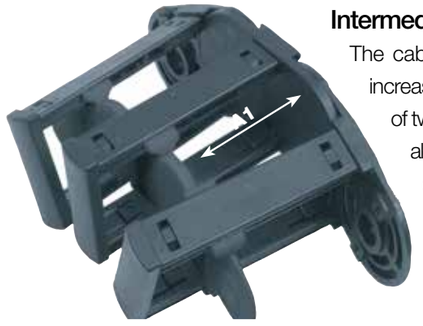

Intermediate link

The cable-friendly intermediate link increases the strength and stability of twisterchain many times over. It also serves as interior separation, dividing the filling space into two chambers. **Outer radius *AR* determines dimension A1.**

Dimensions

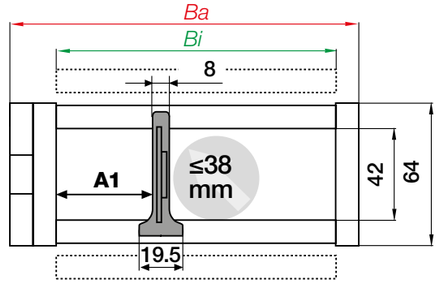

Serie TC42 | Additional parameters dependent on outer radius *AR*

AR [mm]	Max. fill weight α 0° - 180° [kg]	Max. fill weight α 180° - 360° [kg]	Max. V [m/s]	Max. a [m/s²]
400 - 600	6.0	3.6	1.0	2.0
650	5.0	2.7	1.0	1.5
750 - 850	4.0	1.8	1.0	1.0

Series TC42 | Interior separation

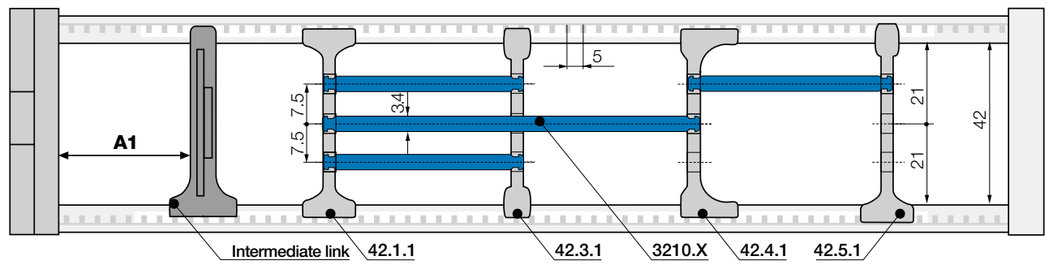

For this series the interior separation products for series E4.42 may be used ▶ www.igus.eu/E4.42

AR = Outer radius e-chain®
IR = Inner radius e-chain®
R = Bend radius e-chain®
X_1 = Inner machine limit
X_2 = Outer machine limit
A1 = Intermediate link position
H = Nominal clearance height
K = Add-on for bend radius
T = Pitch

twisterchain TC56

56mm inner height - product range

AR [mm]	Bi [mm]	Ba [mm]	X_2 [mm]	X_1 [mm]	R 150 [mm] TC56 ...	R 200 [mm] TC56 ...	R 250 [mm] TC56 ...	R 300 [mm] TC56 ...	R 400 [mm] TC56 ...	TC56 [kg/m]
650	125	155	730	470	12.150/650	12.200/650	12.250/650	12.300/650	–	≈ 3.45
650	137.5	168	730	460	–	13.200/650	13.250/650	13.300/650	13.400/650	≈ 3.54
650	150	180	730	450	–	–	15.250/650	15.300/650	15.400/650	≈ 3.62
650	162.5	193	730	440	–	–	16.250/650	16.300/650	16.400/650	≈ 3.70
650	175	205	730	430	–	–	–	17.300/650	17.400/650	≈ 3.78
650	187.5	218	730	420	–	–	–	18.300/650	18.400/650	≈ 3.87
650	200	230	730	400	–	–	–	–	20.400/650	≈ 3.95
750	137.5	168	830	560	.13.150/750	.13.200/750	.13.250/750	.13.300/750	–	≈ 3.54
750	150	180	830	550	–	.15.200/750	.15.250/750	.15.300/750	.15.400/750	≈ 3.62
750	162.5	193	830	540	–	.16.200/750	.16.250/750	.16.300/750	.16.400/750	≈ 3.70
750	175	205	830	530	–	–	.17.250/750	.17.300/750	.17.400/750	≈ 3.78
750	187.5	218	830	520	–	–	.18.250/750	.18.300/750	.18.400/750	≈ 3.87
750	200	230	830	500	–	–	.20.250/750	.20.300/750	.20.400/750	≈ 3.95
850	150	180	930	650	15.150/850	15.200/850	15.250/850	15.300/850	15.400/850	≈ 3.62
850	162.5	193	930	640	16.150/850	16.200/850	16.250/850	16.300/850	16.400/850	≈ 3.70
850	175	205	930	630	17.150/850	17.200/850	17.250/850	17.300/850	17.400/850	≈ 3.78
850	187.5	218	930	620	–	18.200/850	18.250/850	18.300/850	18.400/850	≈ 3.87
850	200	230	930	600	–	–	20.250/850	20.300/850	20.400/850	≈ 3.95

R	150	200	250	300	400
H^{-0}_{+25}	384	484	584	684	884
K	750	900	1,050	1,225	1,450

Pitch [mm/link]	91
Links/m	11
corresponds to[mm]	1,001

twisterchain in a guide trough for rotary movement on an articulated robot - long service life and robust: tested successfully for more than 1,000,000 cycles

Installation dimensions

Dimension A1 dependent on outer radius *AR*

AR [mm]	R 150 A1 [mm]	R 200 A1 [mm]	R 250 A1 [mm]	R 300 A1 [mm]	R 400 A1 [mm]
650	83	85	88	90	97
750	98	101	102	103	110
850	113	116	117	118	124

Dimension A1 always with tolerance of ± 2.5mm

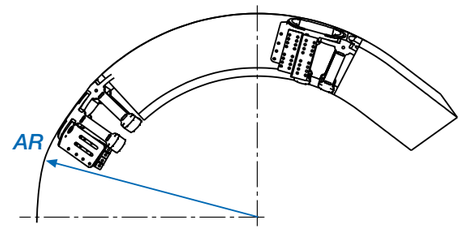

Note: Outer radius *AR* (see drawing) determines dimension **A1**!

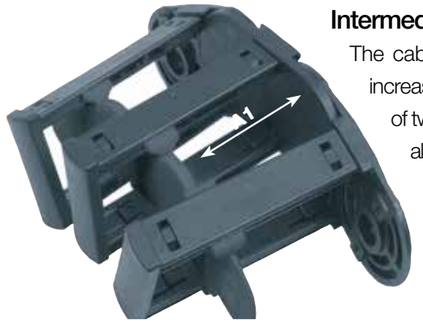

Intermediate link

The cable-friendly intermediate link increases the strength and stability of twisterchain many times over. It also serves as interior separation, dividing the filling space into two chambers. **Outer radius *AR* determines dimension A1.**

Dimensions

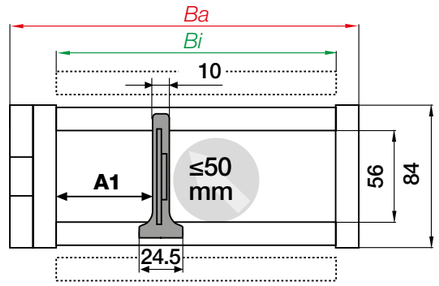

Serie TC56 | Additional parameters dependent on outer radius *AR*

AR [mm]	Max. fill weight α 0° - 180° [kg]	Max. fill weight α 180° - 360° [kg]	Max. V [m/s]	Max. a [m/s²]
650	8.0	5.0	1.0	2.0
750	8.0	5.0	1.0	2.0
850	8.0	5.0	1.0	2.0

Series TC56 | Interior separation

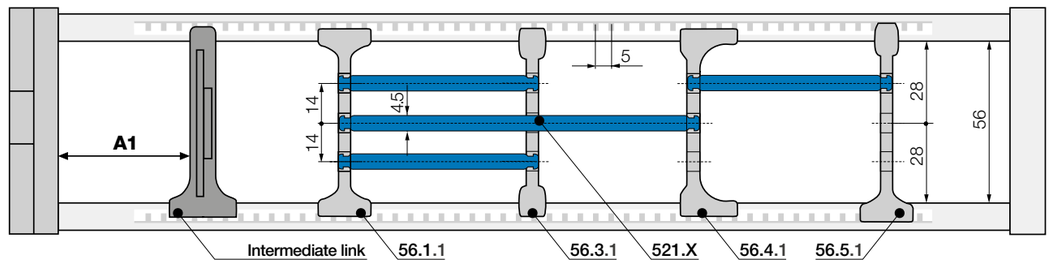

For this series the interior separation products for series E4.56 may be used ▶ www.igus.eu/E4.56

AR = Outer radius e-chain®
IR = Inner radius e-chain®
R = Bend radius e-chain®
X_1 = Inner machine limit
X_2 = Outer machine limit
A1 = Intermediate link position
H = Nominal clearance height
K = Add-on for bend radius
T = Pitch

twisterchain accessories

Steel mounting brackets

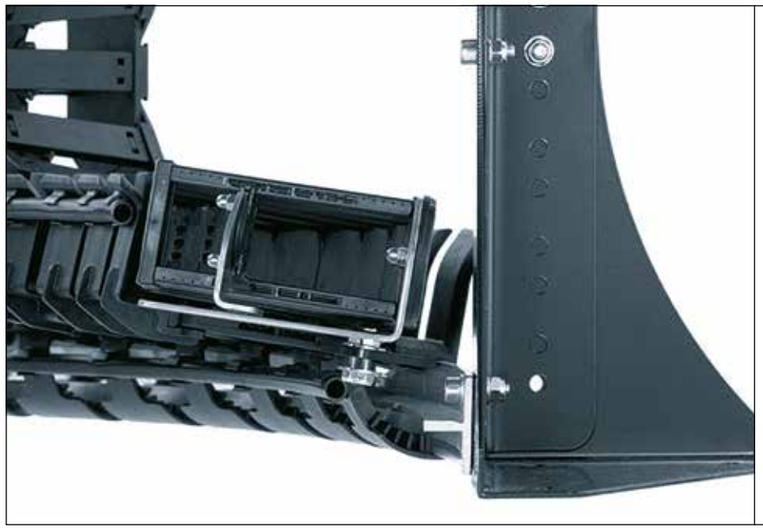

Position 1 Position 2

Important note: twisterchain e-chains® must always start and end on an outer side link (odd number of links).

- One part for all e-chain® widths
- Electrically conductive
- Universal installation
- Material: AISI 304 stainless steel

Steel, one-piece for twisterchain (2nd generation) | Recommended for unsupported and rotary applications

For series	Part No. Full set	Part No. position 1	Part No. position 2
TC32 ▶	TC3200.34.VS.E	TC3200.30.VS.E	TC3200.40.VS.E
TC42 ▶	TC4200.34.VS.E	TC4200.30.VS.E	TC4200.40.VS.E
TC56 ▶	TC5600.34.VS.E	TC5600.30.VS.E	TC5600.40.VS.E

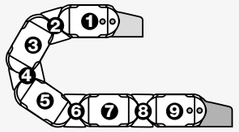

Important note: twisterchain e-chains® must always start and end on an outer side link (odd number of links). An outer side link should always be the first link at the moving end.

TC3200.34.VS.E Order example

- Stainless steel (standard)
- Standard: bolted
- Full set
- Series

Applications

twisterchain application on a cleaning robot

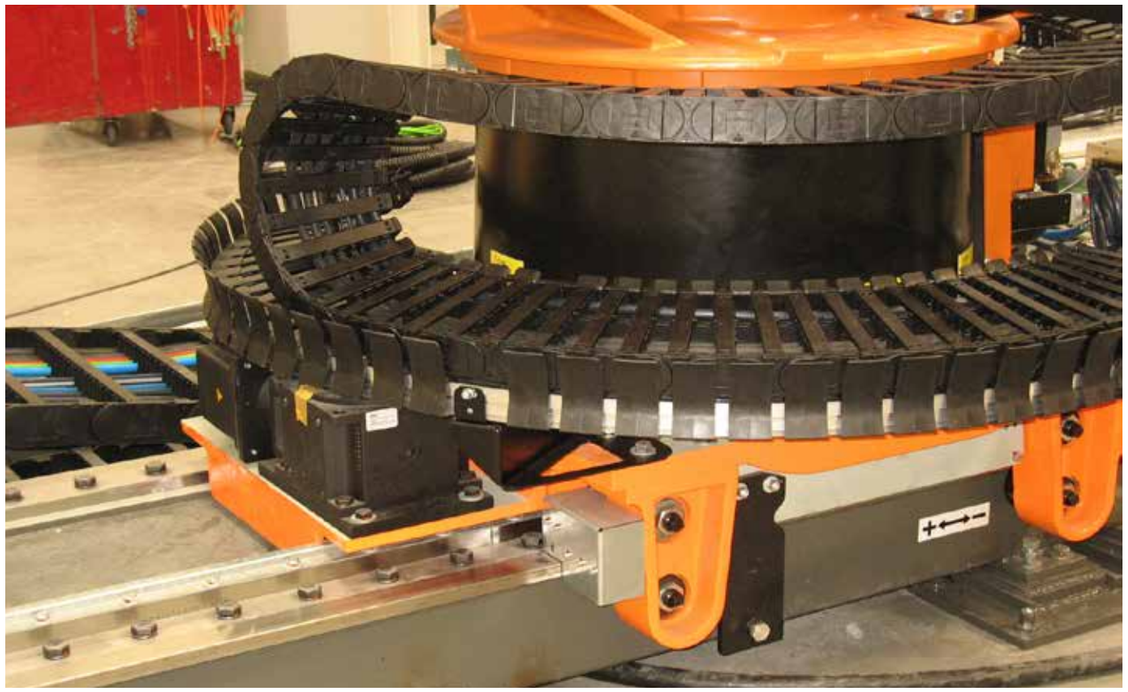

twisterchain application on the robot 7th axis

twisterchain accessories

Guide troughs

Save installation time and cost - better guidance for circular movement - increase service life!

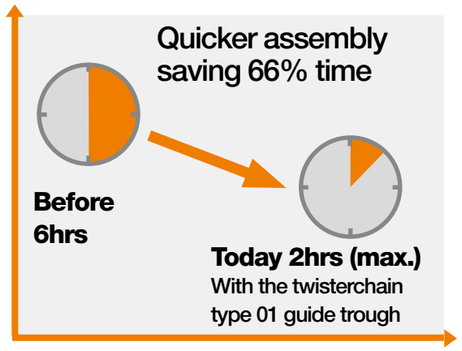

With the twisterchain trough, complex adjustment work is reduced and so assembly time is reduced from 6 hours to 2 hours. It also reduces noise, whilst travel speed and service life can be increased, thanks to its nearly all-plastic design. Available for all twisterchains from the new and original product range.

- Suitable for high dynamics thanks to full guidance of the upper run
- Much smoother and quieter motion of the twisterchain in the trough due to continuous guidance of upper run
- Upper run guided in the plastic trough and supported over the full length
- Fully harnessed delivery possible
- Easy adjustment, alignment and handling
- Assembly time reduced from 6 hours to 2 hours

twisterchain guide trough options

9XXX.31
Complete trough
(**with** base support, height adjustment and attachment angle brackets)

9XXX.32
Upper and lower run trough
(**without** floor support and height adjustment)
Special option: customer supplies base supports

9XXX.30
Lower run trough
(**with** mounting angle brackets)
Special option: customer builds upper run trough

Product range

Guide troughs

Part No. Series	Outer radius *AR* [mm]	Angle of rotation min.-max. α	Part No. complete trough	Part No. upper/lower run trough	Part No. lower run trough
TC32 / TC42	400	0 - 90°	9XXX.31.90 .400/*Bi*.*R*	9XXX.32.90 .400/*Bi*.*R*	9XXX.30.90 .400/*Bi*.*R*
		90° - 180°	9XXX.31.180.400/*Bi*.*R*	9XXX.32.180.400/*Bi*.*R*	9XXX.30.180.400/*Bi*.*R*
		180° - 270°	9XXX.31.270.400/*Bi*.*R*	9XXX.32.270.400/*Bi*.*R*	9XXX.30.270.400/*Bi*.*R*
		270° - 360°	9XXX.31.360.400/*Bi*.*R*	9XXX.32.360.400/*Bi*.*R*	9XXX.30.360.400/*Bi*.*R*
	500	0 - 90°	9XXX.31.90 .500/*Bi*.*R*	9XXX.32.90 .500/*Bi*.*R*	9XXX.30.90 .500/*Bi*.*R*
		90° - 180°	9XXX.31.180.500/*Bi*.*R*	9XXX.32.180.500/*Bi*.*R*	9XXX.30.180.500/*Bi*.*R*
		180° - 270°	9XXX.31.270.500/*Bi*.*R*	9XXX.32.270.500/*Bi*.*R*	9XXX.30.270.500/*Bi*.*R*
		270° - 360°	9XXX.31.360.500/*Bi*.*R*	9XXX.32.360.500/*Bi*.*R*	9XXX.30.360.500/*Bi*.*R*
	600	0 - 90°	9XXX.31.90 .600/*Bi*.*R*	9XXX.32.90 .600/*Bi*.*R*	9XXX.30.90 .600/*Bi*.*R*
		90° - 180°	9XXX.31.180.600/*Bi*.*R*	9XXX.32.180.600/*Bi*.*R*	9XXX.30.180.600/*Bi*.*R*
		180° - 270°	9XXX.31.270.600/*Bi*.*R*	9XXX.32.270.600/*Bi*.*R*	9XXX.30.270.600/*Bi*.*R*
		270° - 360°	9XXX.31.360.600/*Bi*.*R*	9XXX.32.360.600/*Bi*.*R*	9XXX.30.360.600/*Bi*.*R*
TC42 / TC56	650	0 - 90°	9XXX.31.90 .650/*Bi*.*R*	9XXX.32.90 .650/*Bi*.*R*	9XXX.30.90 .650/*Bi*.*R*
		90° - 180°	9XXX.31.180.650/*Bi*.*R*	9XXX.32.180.650/*Bi*.*R*	9XXX.30.180.650/*Bi*.*R*
		180° - 270°	9XXX.31.270.650/*Bi*.*R*	9XXX.32.270.650/*Bi*.*R*	9XXX.30.270.650/*Bi*.*R*
		270° - 360°	9XXX.31.360.650/*Bi*.*R*	9XXX.32.360.650/*Bi*.*R*	9XXX.30.360.650/*Bi*.*R*
	750	0 - 90°	9XXX.31.90 .750/*Bi*.*R*	9XXX.32.90 .750/*Bi*.*R*	9XXX.30.90 .750/*Bi*.*R*
		90° - 180°	9XXX.31.180.750/*Bi*.*R*	9XXX.32.180.750/*Bi*.*R*	9XXX.30.180.750/*Bi*.*R*
		180° - 270°	9XXX.31.270.750/*Bi*.*R*	9XXX.32.270.750/*Bi*.*R*	9XXX.30.270.750/*Bi*.*R*
		270° - 360°	9XXX.31.360.750/*Bi*.*R*	9XXX.32.360.750/*Bi*.*R*	9XXX.30.360.750/*Bi*.*R*
	850	0 - 90°	9XXX.31.90 .850/*Bi*.*R*	9XXX.32.90 .850/*Bi*.*R*	9XXX.30.90 .850/*Bi*.*R*
		90° - 180°	9XXX.31.180.850/*Bi*.*R*	9XXX.32.180.850/*Bi*.*R*	9XXX.30.180.850/*Bi*.*R*
		180° - 270°	9XXX.31.270.850/*Bi*.*R*	9XXX.32.270.850/*Bi*.*R*	9XXX.30.270.850/*Bi*.*R*
		270° - 360°	9XXX.31.360.850/*Bi*.*R*	9XXX.32.360.850/*Bi*.*R*	9XXX.30.360.850/*Bi*.*R*

Complete Part No. **9XXX** with required series (TC32, TC42, TC56),
value ***Bi*** and required **bend radius** ***R*** ▶ **9TC32.31.180.600/06.250**

9TC32.31.180.600/12.250

9XXXX.31.180.600/*Bi*. *R*

Order key
Guide trough

- ***R*** - Bend radius, please add required value
- ***Bi*** - width index, please add required value
- Outer radius e-chain®
- Angle of rotation of application (90°, 180°, 270°, 360°)
- Trough version
- Guide trough of selected series

More order examples

Complete trough	**Part No.**	**9TC32.31.180.600/12.250**
Lower run trough only	**Part No.**	**9TC32.30.180.600/12.250**
Upper and lower run trough without base support	**Part No.**	**9TC32.32.180.600/12.250**

twisterchain accessories

Guide trough - installation dimensions

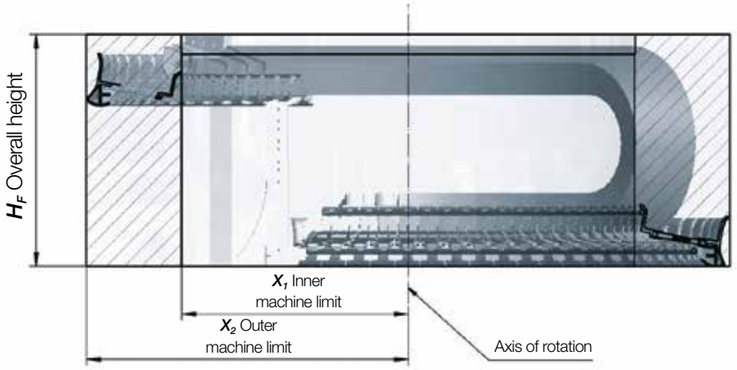

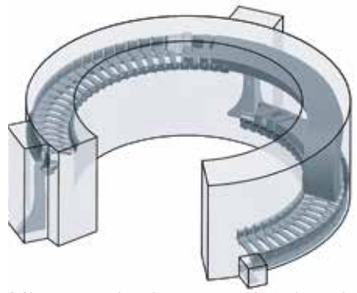

Min. required space for igus® twisterchain guide trough system

Installation dimensions | X_1 inner machine limit and X_2 outer machine limit

AR [mm]	X_2 [mm]	X_1 depending on *Bi* [mm]										
TC32		87.5	100	108	125	137.5	150					
400	480	270	250	250	220	210	200					
500	580	–	350	350	320	310	300					
600	680	–	–	450	420	410	400					
TC42		87.5	100	108	125	137.5	150	162.5	168	175	187.5	200
400	480	270	250	250	220	210	200	190	190	180	–	–
500	580	–	350	350	320	310	300	290	290	280	280	250
600	680	–	–	450	420	410	400	390	390	380	380	350
650	730	–	–	–	470	460	450	440	440	430	420	400
750	830	–	–	–	–	560	550	540	540	530	520	500
850	930	–	–	–	–	–	650	640	640	630	620	600
TC56			–	–	125	137.5	150	162.5	–	175	187	200
650	730	–	–	–	470	460	450	440	–	430	420	400
750	830	–	–	–	–	560	550	540	–	530	520	500
850	930	–	–	–	–	–	650	640	–	630	620	600

Construction height | H_F depending on bend radius of twisterchain guide trough

Part No. Series	*R* [mm]	100	125	150	175	200	250	300	400
		H_F Installation height [mm]							
TC32		370	420	470	520	570	670	–	–
TC42		380	430	480	530	580	680	–	–
TC56		–	–	500	–	600	700	800	1,000

twisterchain accessories

Guide trough - angle of rotation

Angle of rotation for 360° | W_2 angle of upper run twisterchain guide trough

Part No. Series	*AR* [mm]	*R* [mm]	100	125	150	175	200	250	300	400
			W_2 angle of rotation							
TC32/TC42	400		90°	90°	90°	90°	90°	90°	90°	90°
TC32/TC42	500		90°	90°	90°	90°	90°	90°	90°	90°
TC32/TC42	600		135°	135°	135°	135°	90°	90°	90°	90°
TC42/TC56	650		135°	135°	135°	135°	90°	90°	90°	90°
TC42/TC56	750		135°	135°	135°	135°	135°	135°	90°	90°
TC42/TC56	850		135°	135°	135°	135°	135°	135°	135°	135°

Support for the upper run as of 180° rotation angle

Angle of rotation $|W_1|W_{total}$

Angle of rotation of system W_{total}	Angle of lower run W_1
90°	45°
180°	90°
270°	135°
360°	180°

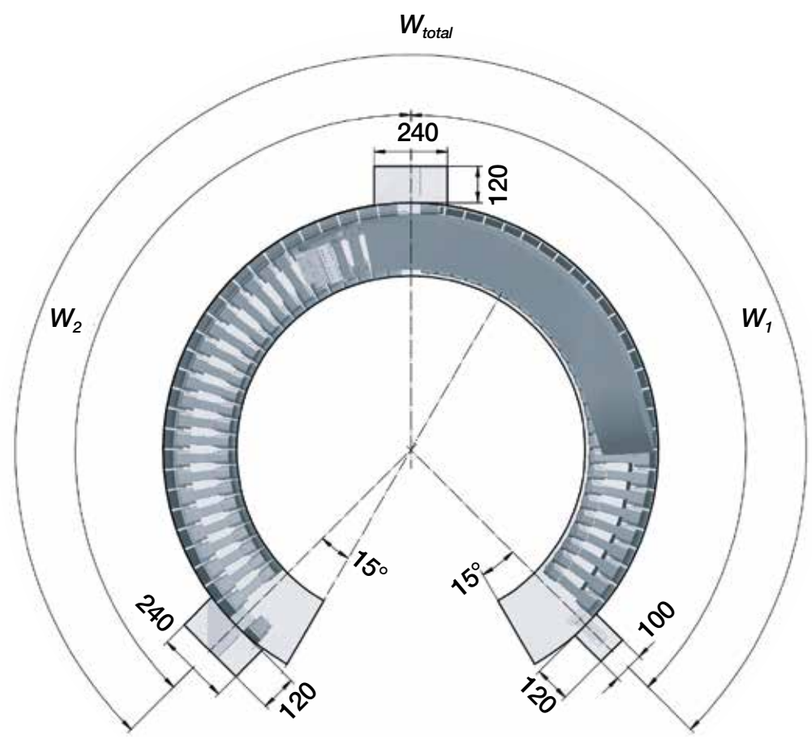

AR = Outer radius e-chain®
IR = Inner radius e-chain®
R = Bend radius e-chain®
X_1 = Inner machine limit
X_2 = Outer machine limit
H_F = Total trough height
H_F = e-chain® height incl. 50mm clearance
H = e-chain® height
K = Add-on for bend radius
W1 = Angle of upper run
W2 = Angle of lower run
W_{total} = Angle of rotation of system

twisterband advantages

Up to 7,000°* rotary movements in small spaces - twisterband

With the compact igus® twisterband, rotations of up to 7,000°* can be achieved cost-effectively, even in confined spaces. Energy, data and media are securely guided.

- Up to 7,000° rotation horizontally and 3,000° rotation vertically
- Rotary speeds of up to 180°/s possible
- Openable with film hinge or openable "easy" design
- HD version with strong pin and hook connection for an even longer service life
- Compact, modular and light
- Strips can be shortened as required
- Minimum installation spaces, fits tightly around the rotary axis
- Cost-effective and easy to fill

Typical industries and applications

● Cable reels ● Robots (robot arms, axis1/6, SCARA robots) ● Machine tools ● Medical equipment ● Radar and telescope equipment ● Aerospace, test, measurement, handling, lifting and installation equipment ● Wind turbines (e.g. blade adjustment) ● Wherever rotary unions are used

*Rotary movements up to 3,600° can be ordered from stock. Above 3,600°, please contact igus®.

Selection table

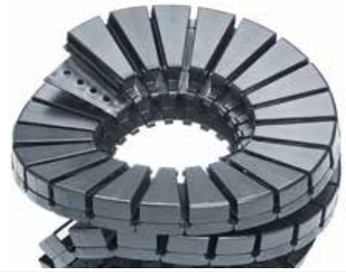

twisterband
e-chain® links on a strip.
Openable with film hinge
or openable "easy" design

Series	Inner height *hi* [mm]	Inner width *Bi* [mm]	Ø X_1 [mm]	Ø X_2 [mm]	≥ *R* [mm]	≤ *R* [mm]	≤ *d1* [mm]	Interior separation	Opening principle	igus® online
TB12.23.9	9	23	40	140	024	035	7	–	●	► www.igus.eu/twisterband
TB20.44.12	12	44	50	220	034	057	9	–	●	► www.igus.eu/twisterband
TB20.44.18	18	44	50	220	034	057	14	yes	●	► www.igus.eu/twisterband
TB29.27.22	22	27	200	320	069	082	17	yes	●	► www.igus.eu/twisterband
TB30.75.22	22	75	90	330	044	077	17	yes	●	► www.igus.eu/twisterband

twisterband HD
e-chain® links with strong pin
and hook connection.
Openable with film-hinge

TBHD12.24.11	11	24	40	140	024	035	10	yes	●	► www.igus.eu/twisterbandHD
TBHD20.44.18	18	44	50	220	037	063	14	yes	●	► www.igus.eu/twisterbandHD
TBHD30.75.22	22	75	90	330	044	077	17	yes	●	► www.igus.eu/twisterbandHD
TBHD42.135.30	30	135	90	500	056	119	24	yes	●	► www.igus.eu/twisterbandHD

Other sizes available upon request. X_1 = inner machine limit X_2 = outer machine limit

Opening system: ● = "easy" design ● = with closure

The complete product range with ordering options,
D CAD, configurators, PDF and application examples ► www.igus.eu/twisterband

Available from stock. Ready to ship in 24 - 48hrs.*

*Average time before the ordered goods are dispatched.

twisterband features

A central shaft must be installed for horizontal orientation angles of rotation above 1,500°

Max. angle of rotation: as a rule of thumb: each segment gives 180° = 360° more rotation

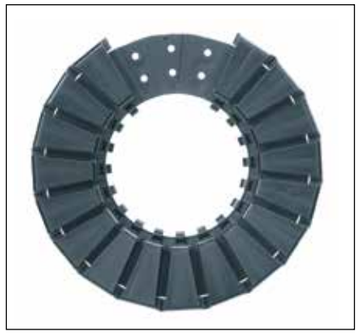

igus® twisterband: minimum installation space, fits tightly around the rotary axis

Film hinge: easy access and quick filling with cables and hoses

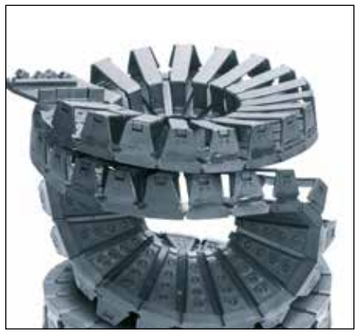

Compact, modular, cost-effective - up to 7,000° rotary movement* in the most confined spaces

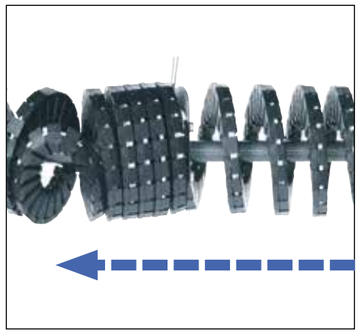

Can be reliably used in various installation positions (horizontal: 7,000° and more). Limited length compensation possible

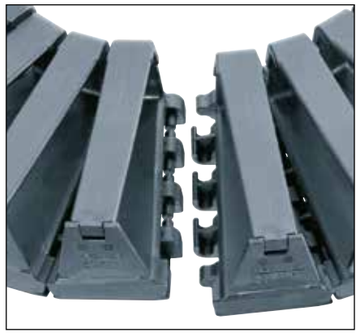

The twisterband HD is an advanced version of the standard twisterband ...

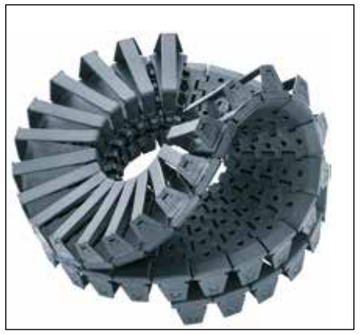

... instead of bands with integral hinges, the twisterband HD version is composed of separate e-chain® links with the pin/hook connecting system ...

... the advantage is a defined radius with higher strength.

iF product design award
2011 igus® twisterband

reddot design award
winner 2011

Technical data

Speed / acceleration*	**180°/s**
twisterband - material - permitted temperature °C, igumid TE	**0°C / +70°C**
twisterband HD - material - permitted temperature °C, igumid G	**0°C / +80°C**
Flammability class, igumid G	**VDE 0304 IIC UL94-HB**
Flammability class, igumid TE	**VDE 0304 IIC UL94-HB**

*Speed / acceleration for TB29.27. upon request

Size overview

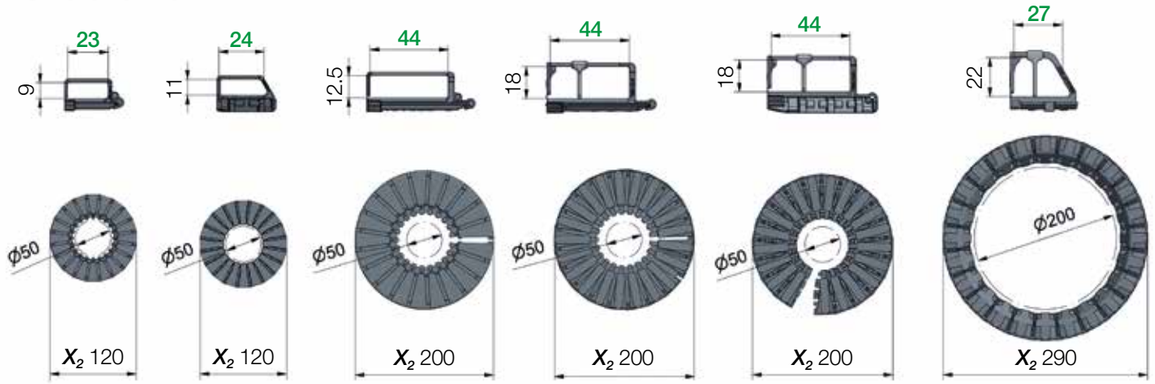

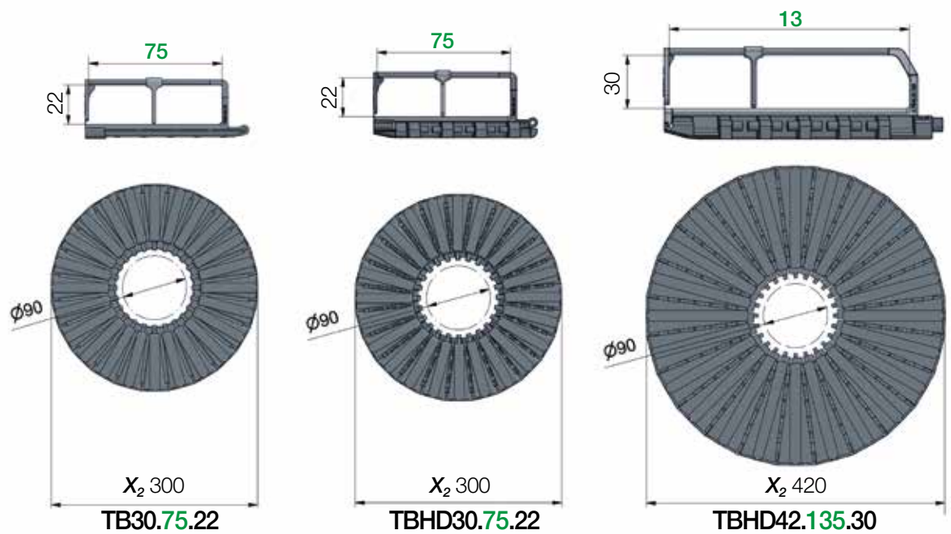

Bi = Inner width e-chain® *hi* = Inner height e-chain® X_1 = Inner machine limit X_2 = Outer machine limit ≥ *R* = Minimum bend radius e-chain® ≤ *R* = Max. bend radius e-chain® *d1* = Max. cable diameter **XX** = Number of strips

Rotating energy supplies

Modular system for fast rotating applications with *RBR*

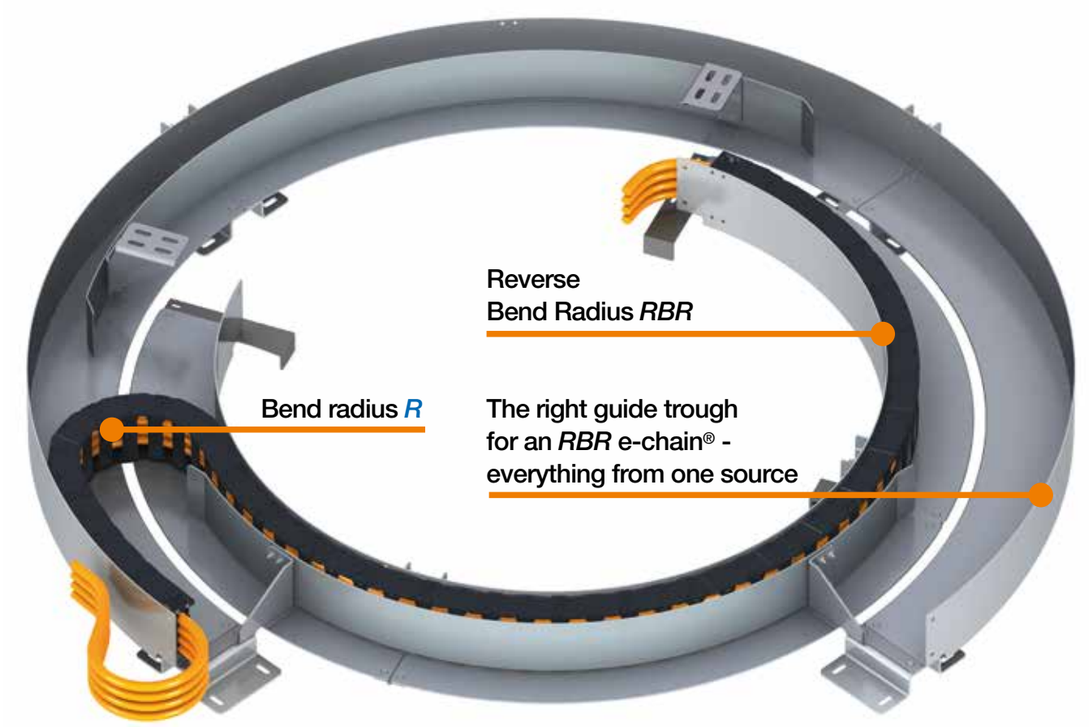

The rotating energy supply systems consist of an e-chain® with a Reverse Bend Radius (***RBR***) and a guide trough system adapted to the e-chain® and the circular motion.igus® offers both trough systems designed for specific projects and some dimensions as pre-engineered standard rotary modules. These guide trough systems consists of two circular guide elements. One part of the guide trough is attached to the static part of the system and the other part to the rotating part of the system. The fixed end of the e-chain® can be freely placed, as both the inside and outside parts of the rotary modules can be rotated. Reverse Bend Radius means that the e-chain® can bend in two directions. Versions with Reverse Bend Radius (***RBR***) can be made for many igus® e-chains® by reworking the standard chain links. The ***RBR*** does not necessarily need to be identical to the normal bend radius (*R*) of an e-chain®. A wide range of circular movements can be achieved with the RBR option.

- Maximum rotation angle in minimal installation space
- Minimum displacement forces and maximum service life
- Modular construction with standardised mounting options
- Integrated strain relief and cable guidance directly in the guide trough
- Determine the rotating energy supply quickly and easily ▶ **www.igus.eu/*rbr*-configurator**
- Depending on the application in question, the e-chains® glide on surfaces made of plastic, stainless steel or galvanised steel and are guided by special channels in a predefined circular movement.
- Failsafe cables for rotary guide systems ▶ **www.igus.eu/chainflex**

Configure in seconds ...

- The length of the e-chain® is calculated according to the rotation angle and the diameters
- The e-chain® length required for your rotation angle can be determined easily, quickly and reliably via the igus® CAD configurator.

More information ▶ www.igus.eu/rbr-configurator

Product range

Table of *RBR* e-chains® available from stock

Part No. *RBR*	*hi* [mm]
snapchain	
TE14.50.028/028.0	–
TE26.120.063/063.0	–
easy chain®	
E14/Z14.1.038/038.0	19
E14/Z14.2.038/038.0	19
E14/Z14.3.038/038.0	19
E14/Z14.3.075/075.0	19
E14/Z14.4.038/038.0	19
E2 micro	
03.05.010/070.0	5
03.10.010/070.0	5
05.16.018/018.0	10
06.20.018/018.0	10.5
06.20.038/350.0	10.5
06.30.018/018.0	10.5
06.64.018/018.0	10.5
E2 mini	
10.015.028/028.0	18
10.015.038/038.0	18
10.015.048/048.0	18
10.025.028/028.0	18
10.025.038/038.0	18
10.025.048/048.0	18
10.025.075/075.0	18
10.038.028/028.0	18
10.038.038/038.0	18
10.038.048/048.0	18
10.038.075/075.0	18
10.050.028/028.0	18
10.050.038/038.0	18
10.050.048/048.0	18
10.050.075/075.0	18
B15.015.048/048.0	17
B15.025.038/038.0	17
B15.025.048/048.0	17
B15.025.075/075.0	17
B15.038.048/048.0	17
B15.038.075/075.0	17
B15.050.038/038.0	17
B15.050.048/048.0	17
B15.050.075/075.0	17

Part No. *RBR*	*hi* [mm]
B15i.025.075/450.0	17
B15i.050.100/460.0	17
B17.4.100/80.0	32
B17.4.100/100.0	32
B17.5.075/650.0	32
E2.1 micro	
E2C.10.40.038/038.0	10
E2C.10.40.038/080.0	10
E2.15.30.048/055.0	15
E2C.15.10.048/1050.0	15
E2C.15.16.038/075.0	15
E2/000	
1400.020.035/480.0	21
1400.020.048/048.0	21
1400.020.075/075.0	21
1400.025.038/038.0	21
1400.025.048/048.0	21
1400.025.075/075.0	21
1400.038.038/038.0	21
1400.038.048/048.0	21
1400.038.075/075.0	21
1400.050.038/038.0	21
1400.050.048/048.0	21
1400.050.075/075.0	21
1400.068.038/038.0	21
1400.068.048/048.0	21
1400.068.075/075.0	21
1400.080.038/038.0	21
1400.080.048/048.0	21
1400.080.075/075.0	21
1400.100.038/038.0	21
1400.100.048/048.0	21
1400.100.065/185.0	21
1400.100.075/075.0	21
1500.038.075/450.0	21
2400.03.075/075.0	25
2400.05.075/075.0	25
2400.02.075/075.0	25
2400.03.055/1400.0	25
2400.07.075/075.0	25
2400.09.055/250.0	25
2400.09.075/075.0	25

Part No. *RBR*	*hi* [mm]
2400.10.075/075.0	25
2400.12.075/075.0	25
2400.12.055/250.0	25
2450.05.100/2000.0	25
2480.05.100/2000.0	25
2500.03.075/650.0	25
2600.06.075/075.0	35
2600.07.075/075.0	35
2600.10.075/075.0	35
2700.05.063/063.0	35
2700.15.150/090.0	35
3400.075.075/075.0	45
3400.100.075/075.0	45
3400.125.075/075.0	45
3400.150.075/075.0	45
3400.175.075/075.0	45
3400.250.075/075.0	45
R2.1	
R2i.40.175.100/1040.0	40
E4.1	
E4.21.*Bi*.048/390.0	21
E4.42.*Bi*.100/500.0	42
E4.42.*Bi*.160/450.0	42
E4/4	
2828.*Bi*.150/685.0	32
4040C.*Bi*.135/1500.0	56
5050.*Bi*.150/150.0	80
easy triflex®	
E332.25.2.048/048.0	2 x 13
E332.25.2.048/075.0	2 x 13
E332.25.2.075/075.0	2 x 13
E332.25.2.100/100.0	2 x 13
E332.25.2.125/125.0	2 x 13
E332.25.2.150/150.0	2 x 13
E332.25.2.175/175.0	2 x1 3
E332.25.2.200/200.0	2 x 13
E332.32.2.075/075.0	2 x 17
E332.32.2.100/100.0	2 x 17
E332.32.2.125/125.0	2 x 17
E332.32.2.150/150.0	2 x 17
E332.32.2.200/200.0	2 x 17
E332.50.2.100/100.0	2 x 26

Part No. *RBR*	*hi* [mm]
E332.50.2.100/200.0	2 x 26
E332.50.2.125/125.0	2 x 26
E332.50.2.150/150.0	2 x 26
E332.50.2.200/200.0	2 x 26
E332.50.2.250/250.0	2 x 26
E332.75.2.140/140.0	2 x 38.5
E332.75.2.175/175.0	2 x 38.5
E332.75.2.200/200.0	2 x 38.5
E332.75.2.250/250.0	2 x 38.5
E332.75.2.300/300.0	2 x 38.5
triflex®	
332.16.038/038.0	16
332.16.048/048.0	16
332.16.075/075.0	16
332.16.100/100.0	16
332.32.075/075.0	32
332.32.075/125.0	32
332.32.100/100.0	32
332.32.100/250.0	32
332.32.100/300.0	32
332.32.125/125.0	32
332.32.150/150.0	32
332.32.200/200.0	32
332.32.250/250.0	32
332.50.100/100.0	50
332.50.125/125.0	50
332.50.150/150.0	50
332.50.200/200.0	50
332.50.250/250.0	50
352.50.100/100.0	50
352.50.125/125.0	50
352.50.150/150.0	50
352.50.200/200.0	50
352.50.250/250.0	50

The complete product range with ordering options,
3D CAD, configurators, PDF and application examples ▶ www.igus.eu/*RBR*

e-chains® with *Reverse Bend Radius* available from stock. Ready to ship in 24-48 hours.*

*Average time before the ordered goods are dispatched.

More 3D e-chains® for simple movements

easy triflex® | triflex® |

easy triflex® advantages

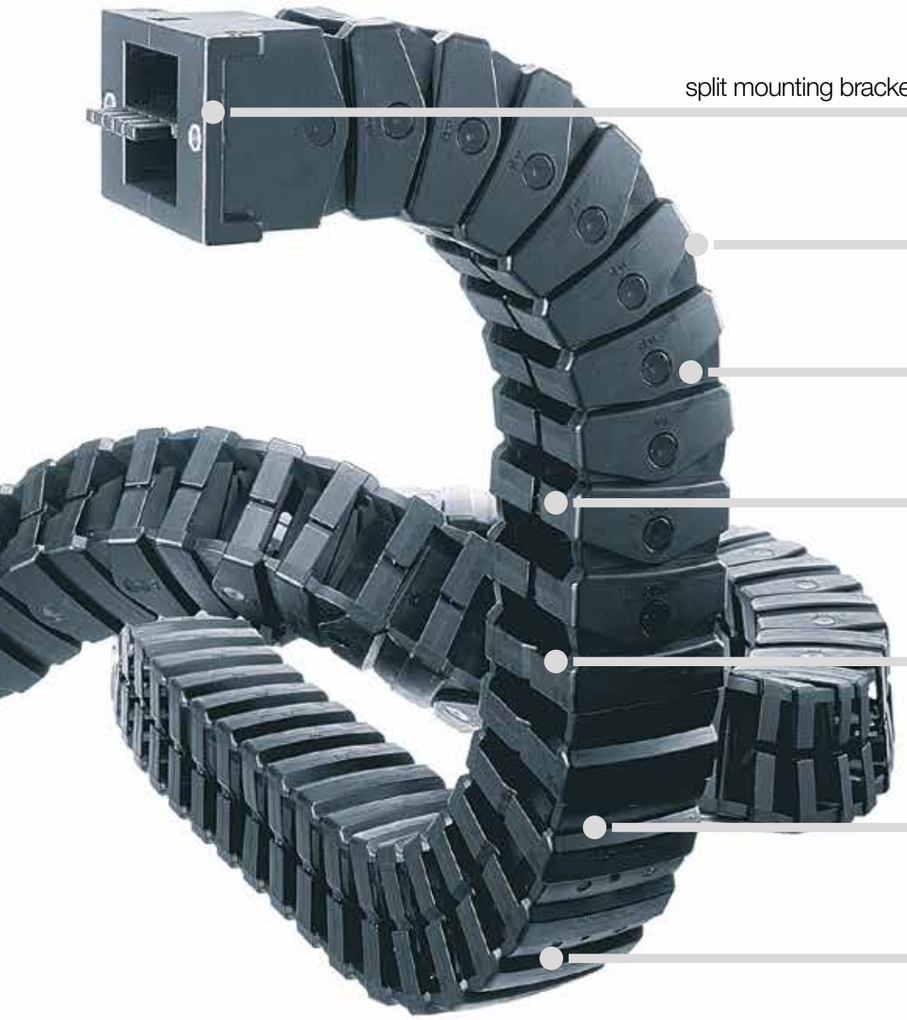

KMA mounting brackets:
split mounting bracket with integrated strain relief

Modular:
easy lengthening and
shortening at any point

Robust:
"push-button" joint

Simple:
easy filling from both sides
with "easy" design

Fast:
simply press cable in along
the inner or outer radius

Customisable:
different bend radii and
types can be combined

Flexible:
multi-axis movement for
all kinds of machinery

For simple 3D applications, easy filling from both sides - easy triflex®

The easy triflex® series was developed to offer safe energy supply for multi-axis movements. In doing so the flexibility of a hose was combined with the stability and defined bend radius of an e-chain®. With easy triflex® the installation of cables and hoses is simple. With flexible crossbars the cables are simply pushed into the e-chain® from either side. The unique modular range allows very complex movements. For example it is possible to combine 1- 2- and 3-axis links in one e-chain®.

UL94-V2
classification

iF product design award
2000 Series easy triflex®

Selection table

Series	Inner height *Bi1* / *Bi1* [mm]	Inner width *Bi3* [mm]	Outer width *Ba* [mm]	Bend radius *R* [mm]	Pitch [mm]	igus® online

Single-axis movement - "easy" design
easy filling from both sides

E332.25	13	25	34	048 - 200	14.5	▶ www.igus.eu/E332
E332.32	17	32	50	075 - 250	25	▶ www.igus.eu/E332
E332.50	26	50	68	100 - 250	30	▶ www.igus.eu/E332
E332.75	38.5	75	96	140 - 300	36	▶ www.igus.eu/E332

Double-axis movement - "easy" design with *RBR* (Reverse Bend Radius)
easy filling from both sides

E332.25	13	25	34	048 - 200	14.5	▶ www.igus.eu/E332
E332.32	17	32	50	075 - 250	25	▶ www.igus.eu/E332
E332.50	26	50	68	100 - 250	30	▶ www.igus.eu/E332
E332.75	38.5	75	96	140 - 300	36	▶ www.igus.eu/E332

Triple-axis movement - "easy" design with *RBR* (Reverse Bend Radius)
easy filling from both sides

E333.25	13	25	34	048 - 200	14.5	▶ www.igus.eu/E333
E333.32	17	32	50	075 - 250	25	▶ www.igus.eu/E333
E333.50	26	50	68	100 - 250	30	▶ www.igus.eu/E333
E333.75	38.5	75	96	140 - 300	36	▶ www.igus.eu/E333

The complete product range with ordering options,
D CAD, configurators, PDF and application examples ▶ www.igus.eu/easytriflex

Available from stock. Ready to ship in 24 - 48hrs.*

*Average time before the ordered goods are dispatched.

Technical data

Technical data

Speed / acceleration	upon request
Material - permitted temperature °C, igumid NB	**-40°C/+120°C**
Flammability class, igumid NB	**VDE 0304 IIC UL94-V2**

Order example | Order key

Order example for complete e-chain® (1.0m), colour black, with mounting brackets:

e-chain® (1.0m)	Please indicate e-chain® length or number of links: 1.0m or 28 links	**E333.75.200/200.0**
+ Mounting brackets	1 set mounting bracket with strain relief	**333.75.12PZ**
Order text:	**1m E333.75.200/200.0 + 333.75.12PZ**	

Order key Single-axis movement

E332.75.2.200.0

- Series
- Width index
- Bend radius *R*
- Standard colour black

Order key Double-axis movement

E332.75.2.200/200.0

- Series
- Width index
- Bend radius *R*
- Bend radius *RBR*
- Standard colour black

Order key Triple-axis movement

E333.75.200/200.0

- Series
- Width index
- Bend radius *R*
- Bend radius *RBR*
- Standard colour black

easy triflex® accessories

KMA mounting brackets

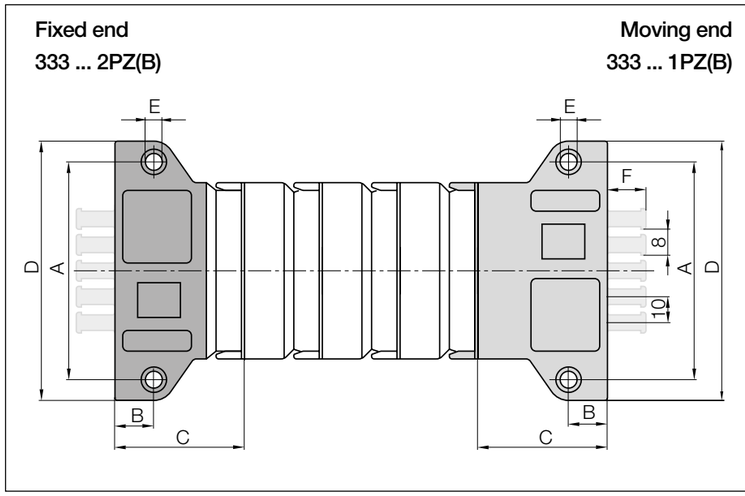

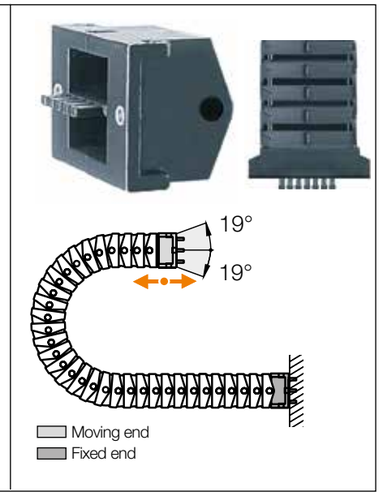

KMA mounting brackets | One end pivoting

Width index	Part No. full set including tiewrap plates	Part No. full set without tiewrap plates	A [mm]	B [mm]	C [mm]	D [mm]	E [mm]	F [mm]	Number of teeth
25.2 / 25. ▶	–	**333.25.12PZ**	43	7	22	52	4.5	–	–
32.2 / 32. ▶	**333.32.12PZB**	**333.32.12PZ**	66	15	46	82	6.5	15	3
50.2 / 50. ▶	**333.50.12PZB**	**333.50.12PZ**	84	15	50	100	6.5	15	5
75.2 / 75. ▶	**333.75.12PZB**	**333.75.12PZ**	109	15	55	125	6.5	15	7

Note series E333: the mounting brackets are only available for e-chains® with **even number** of chain links!

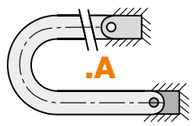

The bracket orientations are set automatically when using an igus® KMA mounting bracket with attachment from any side. To receive a KMA mounting bracket pre-fitted please add index **.A** .

333.75.12PZB.A Order example

- Pre-assembled
- With integrated strain relief tiewrap plates
- Full set
- Width index
- Series

easy triflex® accessories

Mounting brackets, flange, steel

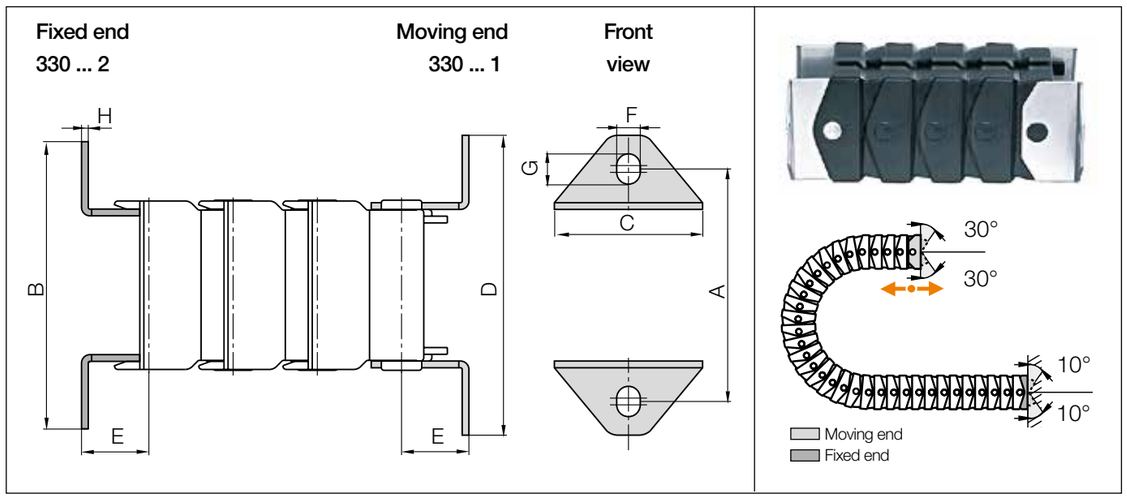

Mounting brackets, flange, steel | Pivoting

Width index	Part No. Full set	A [mm]	B [mm]	C [mm]	D [mm]	E [mm]	F [mm]	G [mm]	H [mm]
25.2 / 25. ▶	**330.25.12**	44	55	29	55	10.5	4.5	6.5	1.5
32.2 / 32. ▶	**330.32.12**	66	84	44	88	20	7	9	2
50.2 / 50. ▶	**330.50.12**	84	102	62	106	25	7	9	2
75.2 / 75. ▶	**330.75.12**	109	127	90	131	25	7	9	2

Note series E333: the mounting brackets are only available for e-chains® with **even number** of chain links!

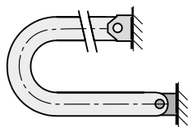

Flush attachment option using steel flange mounting brackets.

Order example

330.75.12

- Full set
- Width index
- Series

easy triflex® accessories

Mounting brackets, angled, steel

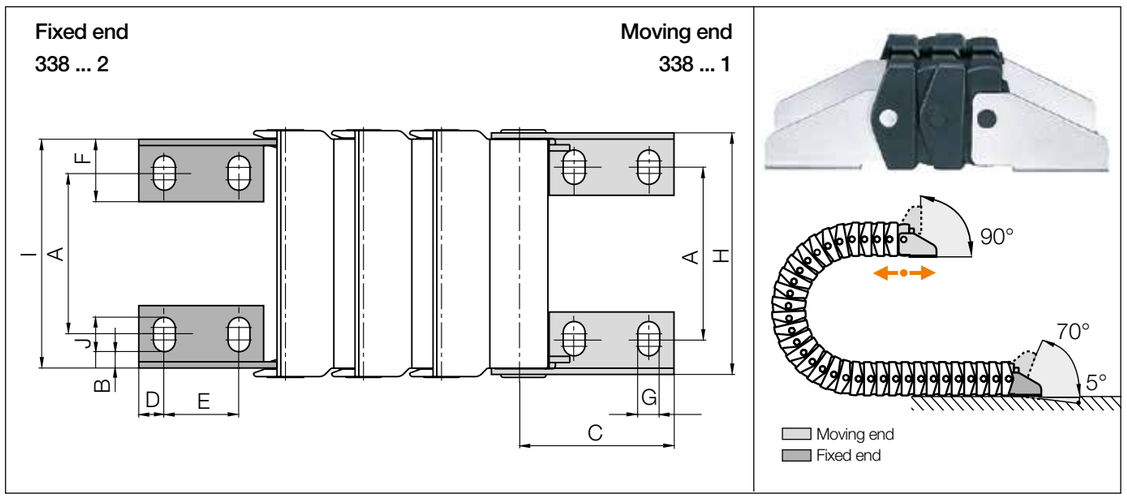

Mounting brackets, angled, steel | Pivoting

Width index	Part No. Full set	A [mm]	B [mm]	C [mm]	D [mm]	E [mm]	F [mm]	G [mm]	H [mm]	I [mm]	J [mm]
25.2 / 25. ▶	**338.25.12**	17	6.25	33	6	16	14	5.5	33.8	31	8.5
32.2 / 32. ▶	**338.32.12**	24	5.5	47	8	24	20	7	49	45	11
50.2 / 50. ▶	**338.50.12**	42	5.5	77	12	35	24	9	67	62	15
75.2 / 75. ▶	**338.75.12**	65	5.5	77	12	35	24	9	95	90	15

Note series E333: the mounting brackets are only available for e-chains® with **even number** of chain links!

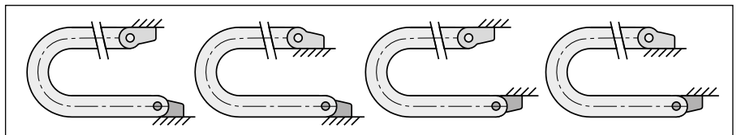

Possible variations for assembled mounting brackets.

Order example

338.75.12

- Full set
- Width index
- Series

triflex® advantages

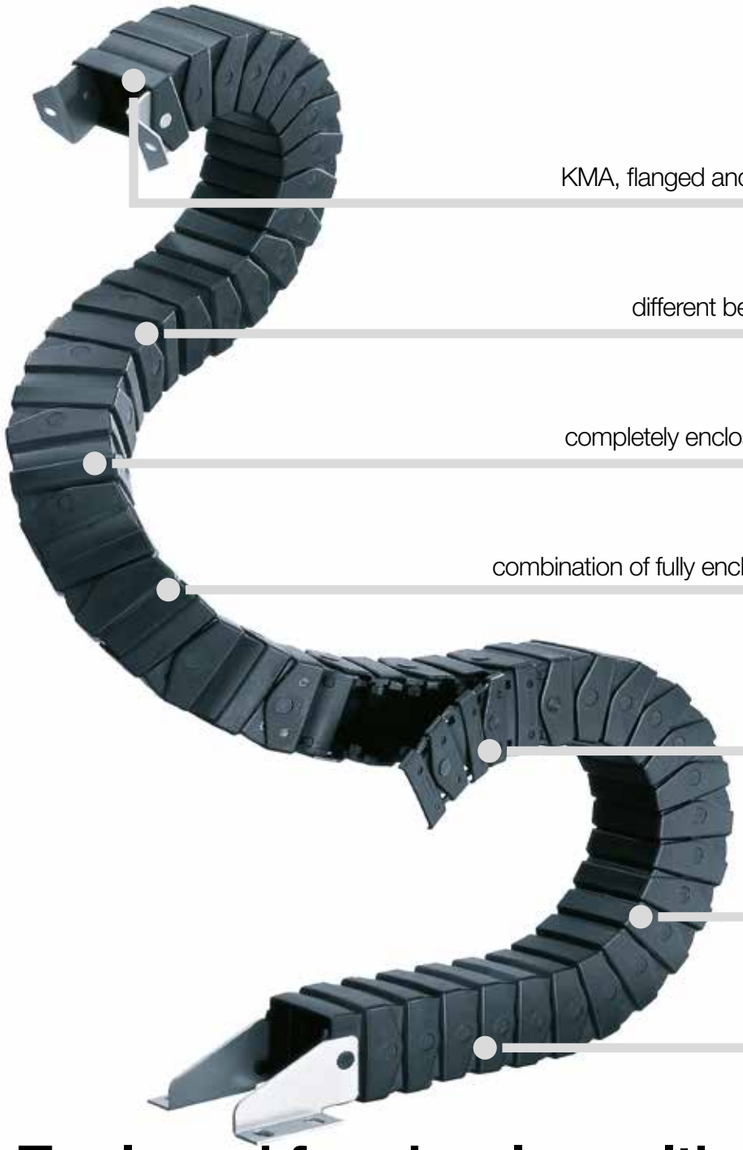

Universal:
KMA, flanged and angled mounting brackets available

Customisable:
different bend radii and types can be combined

Protection:
completely enclosed - protection against dirt and chip

Modular:
combination of fully enclosed and openable types is possible

Variation:
openable series 352 and 353, 50mm cross section

Effective:
cost-effective for complex movements

Modular:
easy lengthening and shortening at any point

Enclosed for simple multi-axis applications - triflex®

The triflex® series was developed to allow safe energy supply for multi-axis movements. In doing so the flexibility of a hose was combined with the stability and defined bend radius of an e-chain®. The unique, modular product range allows very complex motions. For example it is possible to combine 1- 2- and 3-axis links in one e-chain®.

iF product design award
1992 igus® Series triflex®

Selection table

Single-axis movement - enclosed
Protection against dirt and swarf

Series	Inner width *Bi* [mm]	Outer width *Ba* [mm]	Bend radius *R* [mm]	Pitch [mm]	igus® online
332.16	16	26	038 - 100	13.3	▶ www.igus.eu/332
332.32	32	50	075 - 250	25	▶ www.igus.eu/332
332.50	50	68	100 - 250	30	▶ www.igus.eu/332
332.75	75	96	140 - 300	36	▶ www.igus.eu/332
352.50*	50	68	100 - 250	30	▶ www.igus.eu/352

Double-axis movement - enclosed, with *RBR* (Reverse Bend Radius)
Protection against dirt and swarf

332.16	16	26	038 - 100	13.3	▶ www.igus.eu/332
332.32	32	50	075 - 250	25	▶ www.igus.eu/332
332.50	50	68	100 - 250	30	▶ www.igus.eu/332
332.75	75	96	140 - 300	36	▶ www.igus.eu/332
352.50*	50	68	100 - 250	30	▶ www.igus.eu/352

Triple-axis movement - enclosed, with *RBR* (Reverse Bend Radius)
Protection against dirt and swarf

333.16	16	26	038 - 100	13.3	▶ www.igus.eu/333
333.32	32	50	075 - 250	25	▶ www.igus.eu/333
333.50	50	68	100 - 250	30	▶ www.igus.eu/333
333.75	75	96	140 - 300	36	▶ www.igus.eu/333
353.50*	50	68	100 - 250	30	▶ www.igus.eu/353

*Series 352/353 openable

The complete product range with ordering options,
D CAD, configurators, PDF and application examples ▶ www.igus.eu/triflex

Available from stock. Ready to ship in 24 - 48hrs.*
*Average time before the ordered goods are dispatched.

Technical data

Technical data

Speed / acceleration	upon request
Material - permitted temperature °C, igumid G	**-40°C/+120°C**
Flammability class, igumid G	**VDE 0304 IIC UL94-HB**

Order example | Order key

Order example for complete e-chain® (1.0m), colour black, with mounting brackets:

e-chain® (1.0m)	Please indicate e-chain® length or number of links: 1.0m or 28 links	**333.75.200/200.0**
+ Mounting brackets	1 set mounting bracket with strain relief	**333.75.12PZ**
+ interior separation	with 2 separators assembled every 2nd link	**376**
Order text:	**1m 333.75.200/200.0 + 333.75.12PZ + 376**	

Order key Single-axis movement

332.75.200.0
352.50.200.0

- Series
- Width index
- Bend radius *R*
- Standard colour black

Order key Double-axis movement

332.75.200/200.0
352.75.200/200.0

- Series
- Width index
- Bend radius *R*
- Bend radius ***RBR***
- Standard colour black

Order key Triple-axis movement

333.75.200/200.0
353.75.200/200.0

- Series
- Width index
- Bend radius *R*
- Bend radius ***RBR***
- Standard colour black

easy triflex® accessories

KMA mounting brackets

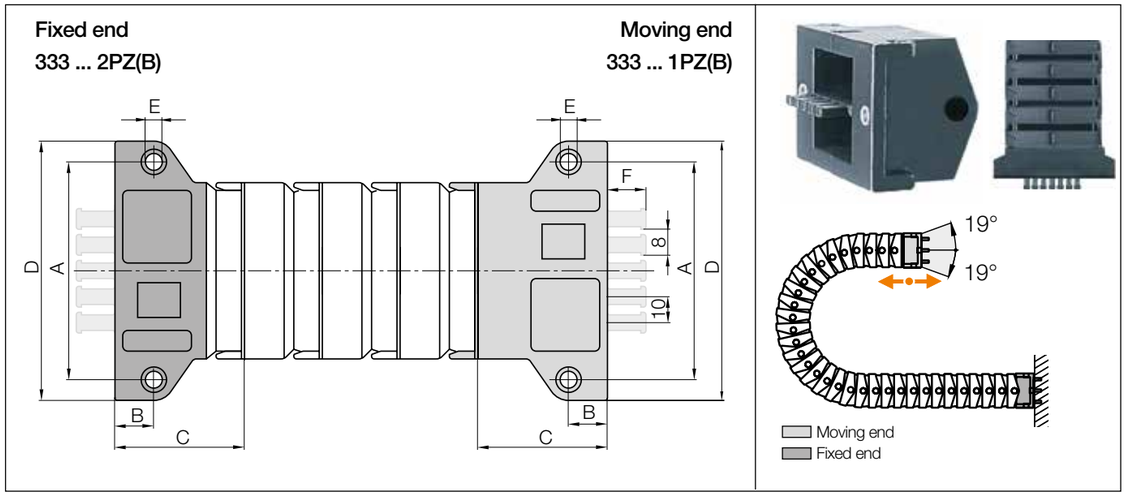

KMA mounting brackets | One end pivoting

Width index	Part No. full set including tiewrap plates	Part No. full set without tiewrap plates	A [mm]	B [mm]	C [mm]	D [mm]	E [mm]	F [mm]	Number of teeth
32.	**333.32.12PZB**	**333.32.12PZ**	66	15	46	82	6.5	15	3
50.	**333.50.12PZB**	**333.50.12PZ**	84	15	50	100	6.5	15	5
75.	**333.75.12PZB**	**333.75.12PZ**	109	15	55	125	6.5	15	7

Note series 333: the mounting brackets are only available for e-chains® with **even number** of chain links!

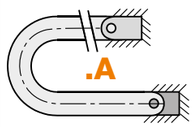

The bracket orientations are set automatically when using an igus® KMA mounting bracket with attachment from any side. To receive a KMA mounting bracket pre-fitted please add index **.A** .

333.75.12PZB.A Order example

- Pre-assembled
- With integrated strain relief tiewrap plates
- Full set
- Width index
- Series

easy triflex® accessories

Mounting brackets, flange, steel

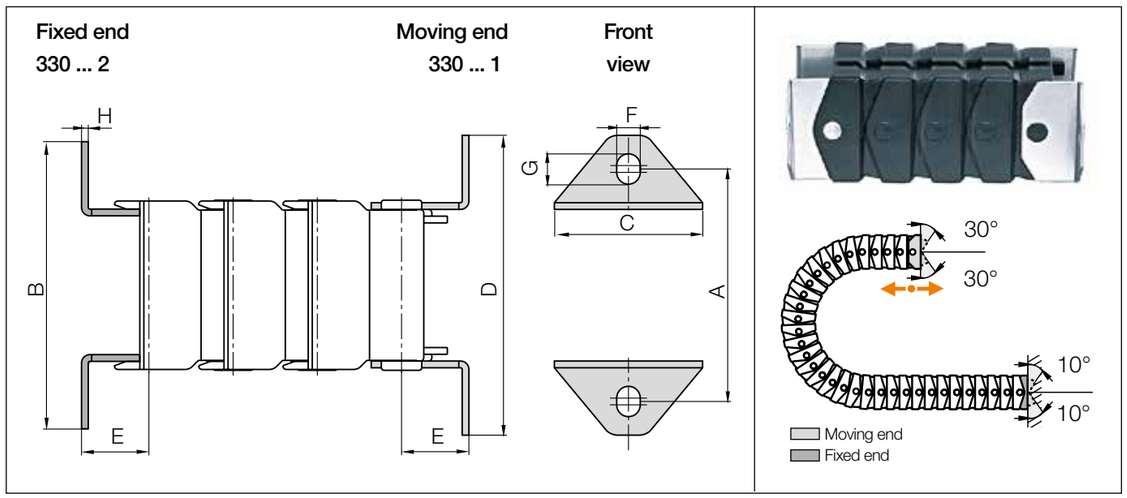

Mounting brackets, flange, steel | Pivoting

Width index	Part No. Full set	A [mm]	B [mm]	C [mm]	D [mm]	E [mm]	F [mm]	G [mm]	H [mm]
16.	▶ **330.16.12**	35	53	21	57	10	4.5	6	1
32.	▶ **330.32.12**	66	84	44	88	20	7	9	2
50.	▶ **330.50.12**	84	102	62	106	25	7	9	2
75.	▶ **330.75.12**	109	127	90	131	25	7	9	2

Note series 333: the mounting brackets are only available for e-chains® with **even number** of chain links!

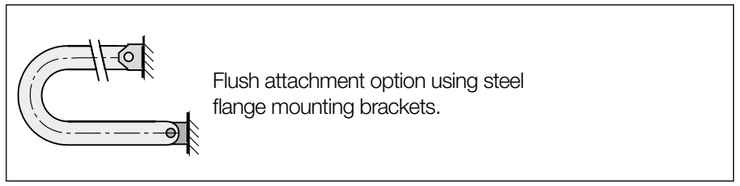

Flush attachment option using steel flange mounting brackets.

330.75.12 Order example

- Full set
- Width index
- Series

easy triflex® accessories

Mounting brackets, angled, steel

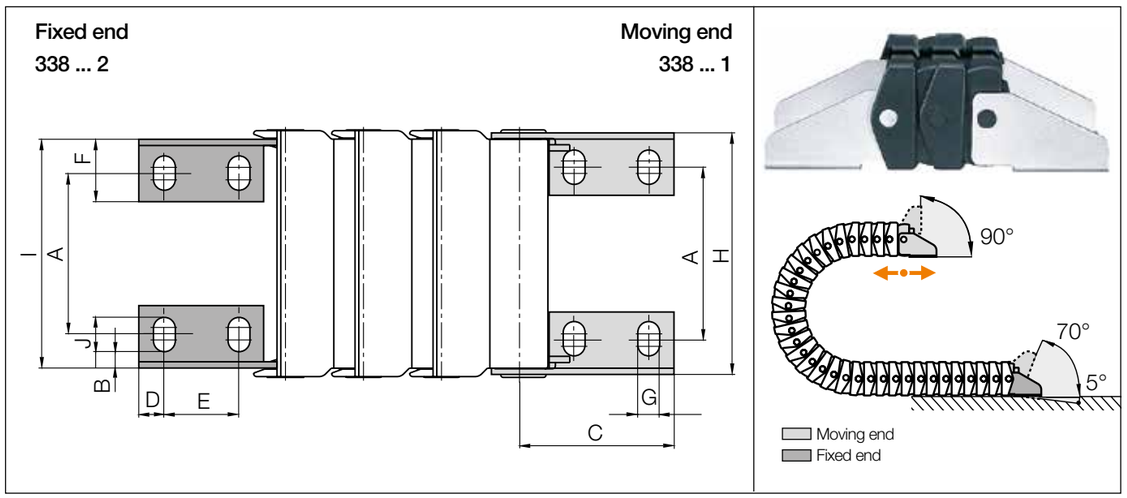

Mounting brackets, angled, steel | Pivoting

Width index	Part No. Full set	A [mm]	B [mm]	C [mm]	D [mm]	E [mm]	F [mm]	G [mm]	H [mm]	I [mm]	J [mm]
16.	▶ **338.16.12**	12	3	25	5	10	11	4.5	25	23	6
32.	▶ **338.32.12**	24	5.5	47	8	24	20	7	49	45	11
50.	▶ **338.50.12**	42	5.5	77	12	35	24	9	67	62	15
75.	▶ **338.75.12**	65	5.5	77	12	35	24	9	95	90	15

Note series 333: the mounting brackets are only available for e-chains® with **even number** of chain links!

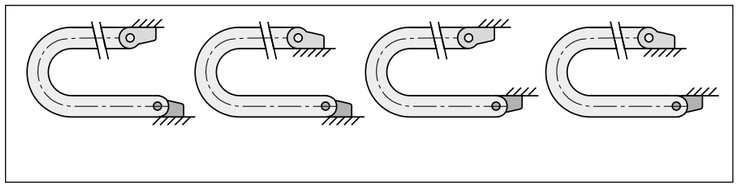

338.75.12 Order example

- Full set
- Width index
- Series

E4.1/E4Q

e-chains® and e-tubes for safe energy supply on the robot 7th axis

Ready-to-connect, harnessed e-chain systems®, e.g. for axis 7,
e-spool® flex 2.0 ▶ From page 180,
readychain® ▶ From page 246

E4.1 system advantages

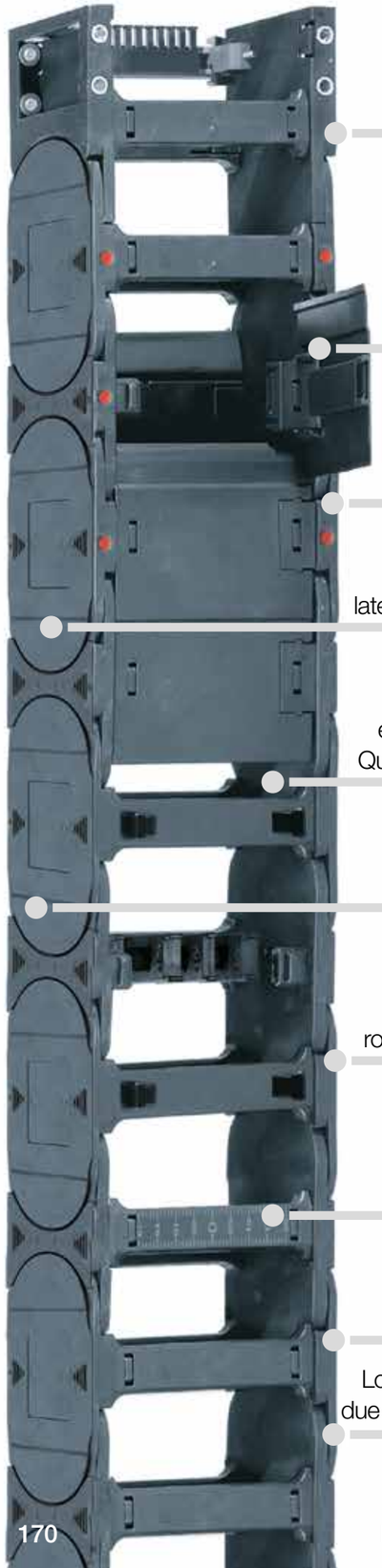

Attachment from any side with KMA mounting brackets

Swarf protection: openable lids

Quiet operation: optional noise dampers

Long service life: lateral gliding surfaces

25% faster: easy assembly with QuickLock-crossbars

Straight run: due to inner/outer link principle

No pretension: NC version by rotating the outer link

Precise partitions: notch crossbar with visual scale

High strength: due to undercut design

Low-noise operation: due to integrated brake

Safe energy supply for axis 7 - E4.1

Reliable energy supply for axis 7 with igus® e-chains®. igus® e-chains® are also the ideal partner for your robot application over long travels (in conjunction with igus® guide troughs), high acceleration rates or in dirty environments.

- Undercut design for high lateral stability
- High push/pull strength for long travels and unsupported lengths
- Well suited for side-mounted applications
- Noise-reducing brake and optional noise dampers
- Inner and outer links for quick assembly, with or without pretension

Fraunhofer IPA TESTED DEVICE

IPA Qualification Certificate - Report IG 1303-640-1:
ISO Class 2, according to DIN EN ISO 14644-1 for series E4.32.10.063.0.CR at v = 0.5m/s, 1.0m/s, 2.0m/s

41 dB(A) - value determined at the igus® test-lab, v = 1.8m/s unsupported, series E4.21.060.038.0

Electrically conductive ESD e-chains® - several series available from stock

Explore the benefits ▶ www.igus.eu/best/E4.1

Selection table

Series	Inner height *hi* [mm]	Inner width *Bi* [mm]	Outer width *Ba* [mm]	Outer height *ha* [mm]	Bend radius *R* [mm]	Unsupported length ≤ [m]	igus® online
							
e-chains® with crossbars every link the all-rounder - also for particularly demanding applications Please observe the guidelines for the e-chains® selection							
E4.21	21	30 - 140	44 - 154	28	038 - 200	2.50	▶ www.igus.eu/E4.21
E4.28	28	40 - 300	60 - 320	42	055 - 250	2.50	▶ www.igus.eu/E4.28
E4.32	32	50 - 400	73 - 423	54	063 - 300	3.30	▶ www.igus.eu/E4.32
E4.42	42	50 - 400	76 - 426	64	075 - 350	4.00	▶ www.igus.eu/E4.42
E4.56	56	50 - 600	84 - 634	84	135 - 500	5.00	▶ www.igus.eu/E4.56
E4.80	80	50 - 600	100 - 650	108	150 - 1,000	6.20	▶ www.igus.eu/E4.80
E4.112	112	50 - 600	102 - 652	140	200 - 1,000	6.50	▶ www.igus.eu/E4.112
E4.162	162	200 - 600	256 - 656	195	250 - 1,000	6.75	▶ www.igus.eu/E4.162
							
e-chains® with crossbars every 2nd link the cost-effective, easy-to-install alternative for almost all applications Please observe the guidelines for the e-chains® selection							
H4.32	32	50 - 400	73 - 423	54	063 - 300	3.30	▶ www.igus.eu/H4.32
H4.42	42	50 - 400	76 - 426	64	075 - 350	4.00	▶ www.igus.eu/H4.42
H4.56	56	50 - 600	84 - 634	84	135 - 500	5.00	▶ www.igus.eu/H4.56
H4.80	80	50 - 600	100 - 650	108	150 - 1,000	6.20	▶ www.igus.eu/H4.80
							
e-tubes fully enclosed, excellent cable protection Please observe the guidelines for the e-chains® selection							
R4.28	28	50 - 300	70 - 320	42	075 - 250	2.50	▶ www.igus.eu/E4.28
R4.32	32	50 - 300	73 - 323	54	125 - 300	3.30	▶ www.igus.eu/E4.32
R4.42	42	50 - 300	76 - 326	64	125 - 350	4.00	▶ www.igus.eu/E4.42
R4.56	56	75 - 462	109 - 497	84	135 - 500	5.00	▶ www.igus.eu/E4.56
R4.80	80	100 - 462	150 - 513	108	200 - 1,000	6.20	▶ www.igus.eu/E4.80
R4.112	108	200 - 500	252 - 552	140	250 - 1,000	6.50	▶ www.igus.eu/E4.112

The complete product range with ordering options,
D CAD, configurators, PDF and application examples ▶ www.igus.eu/E4.1

Available from stock. Ready to ship in 24 - 48hrs.*

*Average time before the ordered goods are dispatched.

3D CAD, configurators, service life calculation and more ▶ www.igus.eu/E4.1

Design principle ...

Undercut, combined with the inner/outer-link solution

E4.1 system

High stability and strength and easy installation

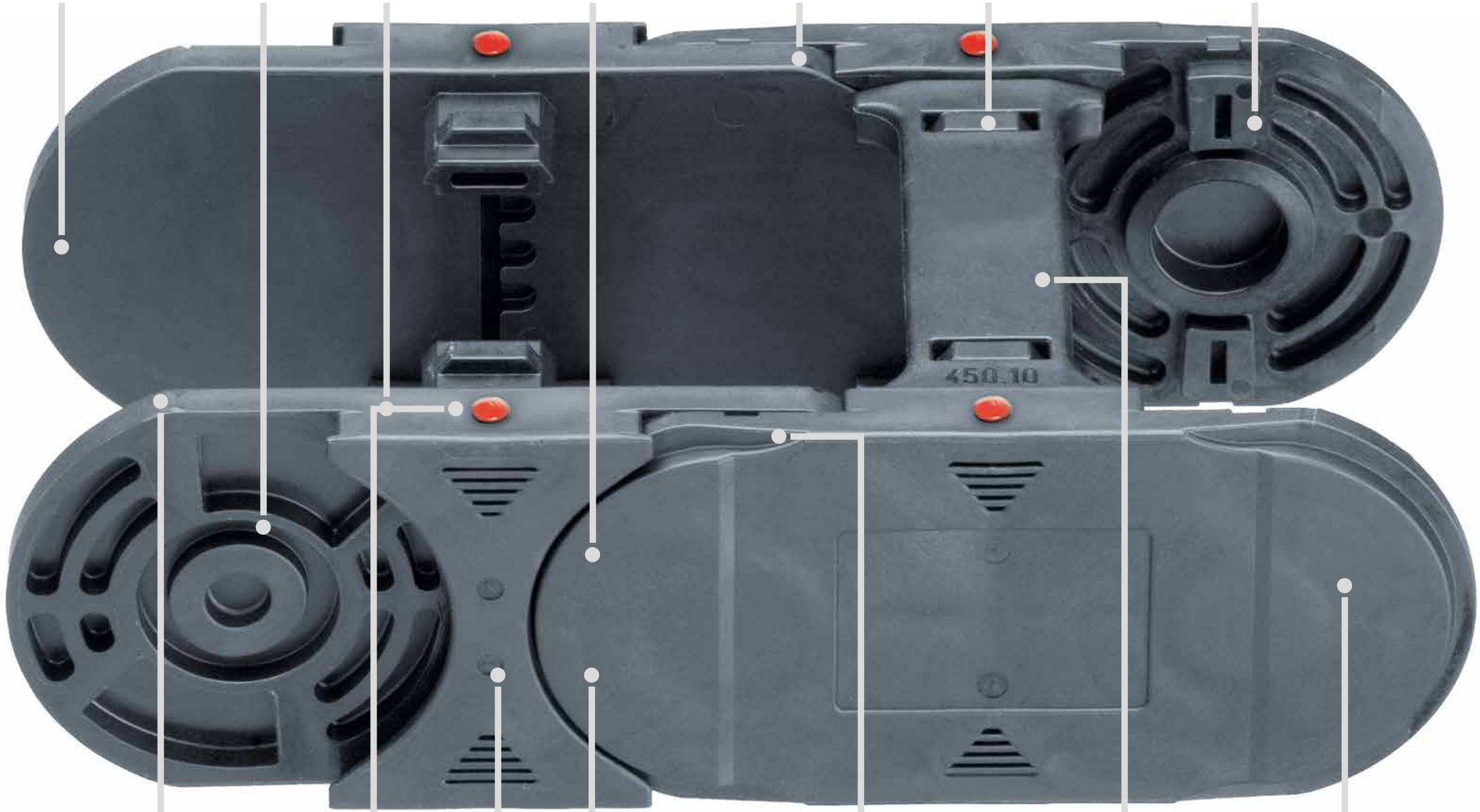

Smooth, cable-friendly inner surfaces

Low-noise operation due to integrated brake on the radial stop-dogs

Smooth and wear-resistant gliding surface - no additional glide shoes required

Option with or without camber simply by reversing outer links

ESD version ideal with large undercut contact area

Strong crossbars with double locking

Double vertical stop-dog system for larger unsupported lengths

Special e-chain® link contour provides low rolling noise

Optional noise dampers

Straight run and fast assembly due to inner/outer-link design

Very high stability due to the undercut design

Cable-friendly, rounded crossbar

Integrated lateral wear pads for a long service life (also for side-mounted applications)

E4Q system advantages

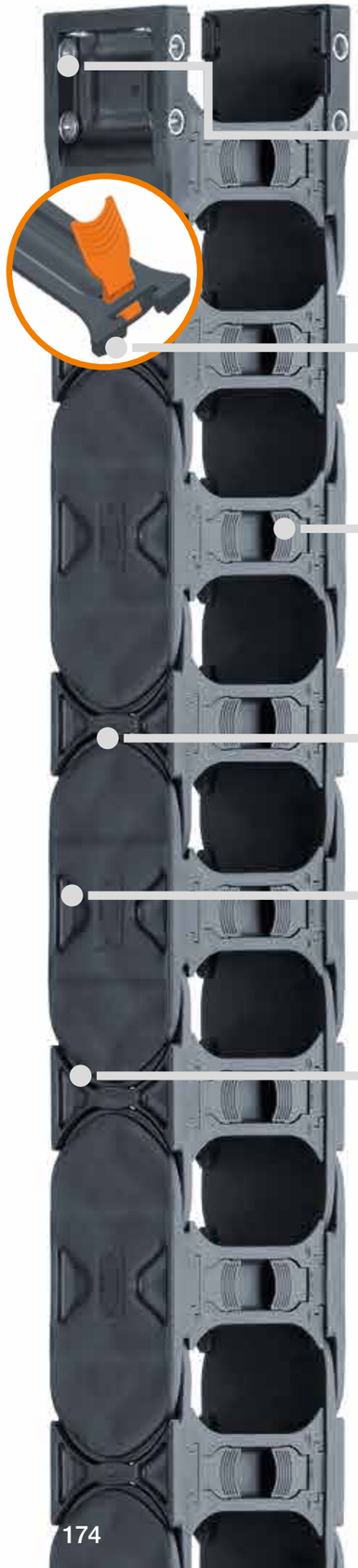

Attachment from any side with KMA mounting brackets

40% faster filling[1]: crossbar designed for tool-free opening and closing

15% higher pull-out strength of the crossbars[1]: strong connection to the e-chain®

10% less weight[1]: material recesses for optimised weight and strength

Stronger[1]: optimum force distribution (four stop-dogs)

17dB(A) quieter[2]: optional noise accessories available

1) Compared to E4.1 system

2) Compared to 4040C series

The next generation of safe energy supply systems for axis 7 - E4Q

Easy opening and closing, without tools.
The latest E4Q e-chains® generation combines proven design features of the 12-year old, robust E4.1 e-chains® standard with new bionic design elements and a novel opening mechanism. This gives the E4Q an even longer service life and significantly improved ease of installation.

- Tool-free opening and closing
- Sustainability - 10% less material means 10% less energy consumption during production
- Short cross-bar pickup for even easier filling of the e-chain®
- Optimised interior geometry for longer cable service life
- Integrated grid structure on crossbars for fixed interior separation with narrower separators
- Inner/outer link principle for straight run
- Undercut design ensures the best hold as well as high lateral and torsion strength

GERMAN DESIGN AWARD WINNER 2021

More information ▶ www.igus.eu/E4Q

Selection table

Series	Inner height *hi* [mm]	Inner width *Bi* [mm]	Outer width *Ba* [mm]	Outer height *ha* [mm]	Bend radius *R* [mm]	Unsupported length ≤ [m]	igus® online
 **e-chains® with crossbars every link** the all-rounder - also for particularly demanding applications Please observe the guidelines for the e-chains® selection							
E4Q.34	34	075 - 400	98 - 432	54	063 - 300	3.60	▶ www.igus.eu/E4Q.34
E4Q.44	44	075 - 400	101 - 426	64	075 - 350	4.00	▶ www.igus.eu/E4Q.44
E4Q.58	58	100 - 500	134 - 534	84	135 - 500	5.00	▶ www.igus.eu/E4Q.58
E4Q.82	82	100 - 500	150 - 550	108	150 - 1,000	6.20	▶ www.igus.eu/E4Q.82
 **e-chains® with crossbars every 2nd link** the cost-effective, easy-to-install alternative for almost all applications Please observe the guidelines for the e-chains® selection							
H4Q.34	34	075 - 400	98 - 432	54	063 - 300	3.60	▶ www.igus.eu/E4Q.34
H4Q.44	44	075 - 400	101 - 426	64	075 - 350	4.00	▶ www.igus.eu/E4Q.44
H4Q.58	58	100 - 500	134 - 534	84	135 - 500	5.00	▶ www.igus.eu/E4Q.58
H4Q.82	82	100 - 500	150 - 550	108	150 - 1,000	6.20	▶ www.igus.eu/E4Q.82

The complete product range with ordering options,
D CAD, configurators, PDF and application examples ▶ www.igus.eu/E4Q

Available from stock. Ready to ship in 24 - 48hrs.*

*Average time before the ordered goods are dispatched.

Easy handling - opening and closing of an e-chain® without tools, save up to 40% assembly time compared to E4.1 series

3D CAD, configurators, service life calculation and more ▶ www.igus.eu/E4Q

Design principle ...

Open and close the e-chain® easily without tools

E4Q system

Simple handling

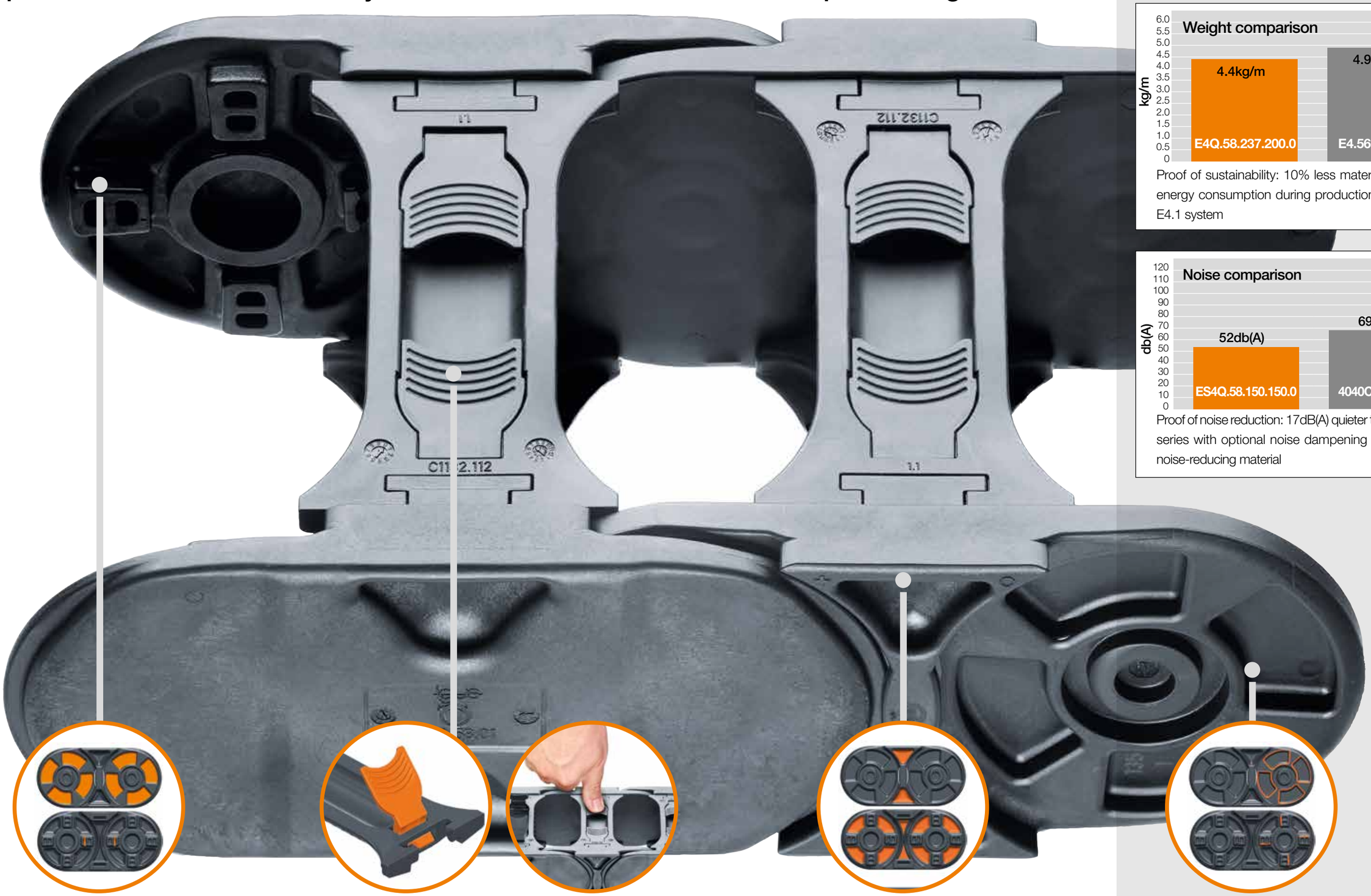

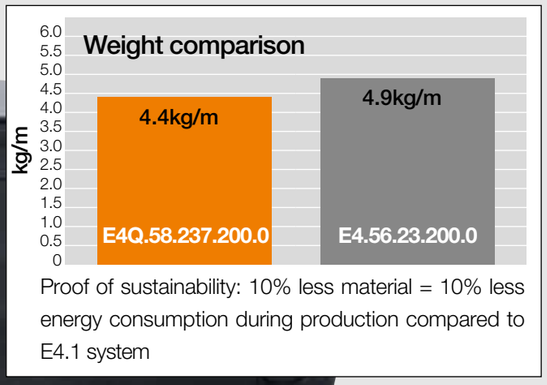

Proof of sustainability: 10% less material = 10% less energy consumption during production compared to E4.1 system

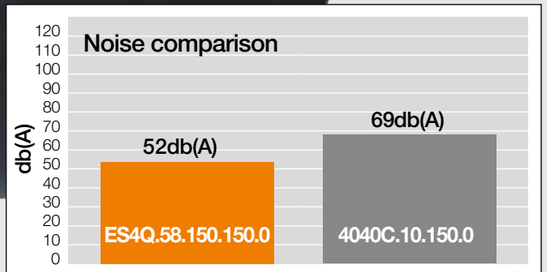

Proof of noise reduction: 17dB(A) quieter than the 4040C series with optional noise dampening parts made of noise-reducing material

Optional noise dampening - new system for noise reduction. 17dB(A) quieter than the 4040C series

Open and close the E4Q e-chain® entirely without tools. 40% faster installation or filling than the E4.1 system

Lighter e-chain® link structure thanks to material savings in design. 10% lighter than the E4.1 system

More strength and a higher unsupported length than with the E4.1 system thanks to vertical and horizontal stop-dogs

E4.1/E4.Q

Other advantages and design features

igus® E4.1 e-chain®
on axis 7

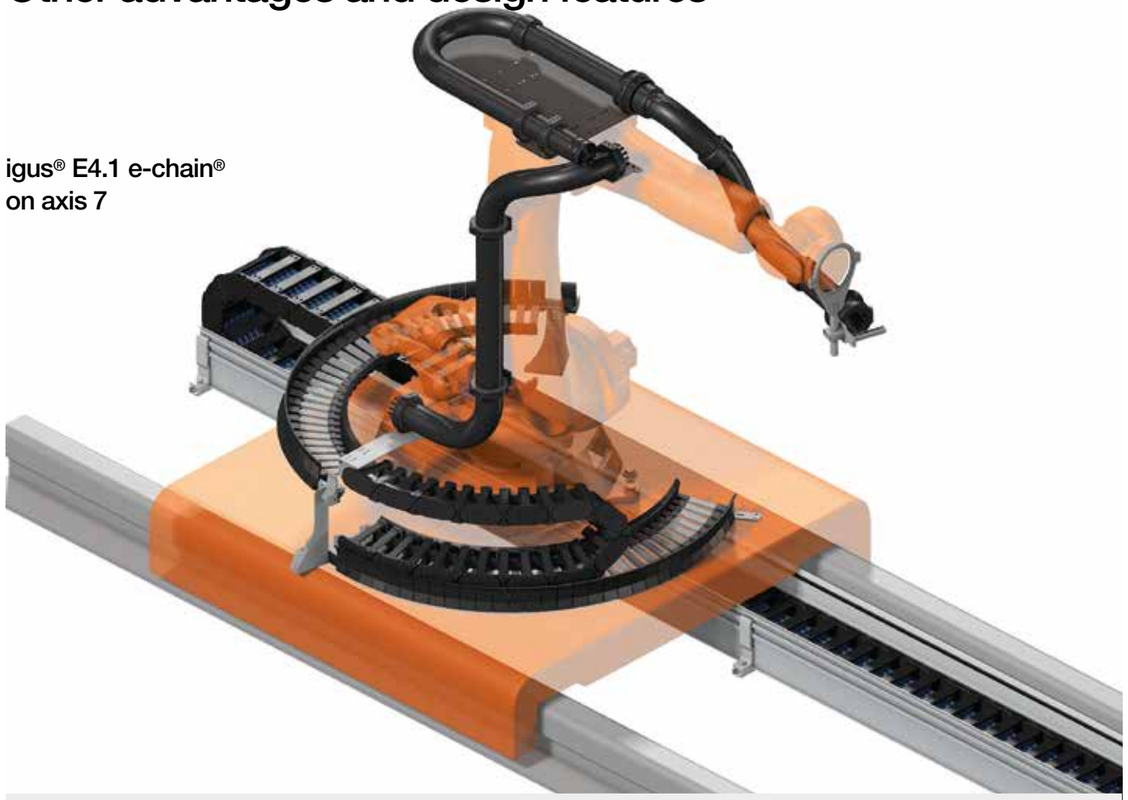

Application	Design features
Long unsupported lengths	Special stop-dogs, undercut design
Quiet operation, unsupported/gliding	Built-in "brake", smooth gliding surfaces, optional noise dampers
Hanging & standing installation	Torsional strength through undercut design, option "without pretension" (by turning the outer link)
Long travels	High thrust forces due to undercut design and stop-dogs, large and smooth gliding surfaces
Unsupported, side-mounted	Undercut design increases side-mounted unsupported length
Fast assembly	Inner/outer link principle
Circular movements	By reworking the links
Increase the cables service life	Smooth, wide, solid plastic load-bearing surface for cables, interior separations that can be assembled quickly
Increase the e-chain® service life	Large pins and optimised material, high strength
ESD	Undercut design for safe contact surfaces when moving (special version in conductive material)
Dirt, chips and humidity	Undercut design prevents broken chains, dirt-resistant construction

Wear tests

Increase the service life of the cable with igus® components

Cables last up to 4 times longer

With the optimised igus® separators, the service life of cables and hoses can be increased by a factor of 4 - the rounded base, which creates a smooth transition to the crossbar, does not offer any interfering edges on which the cables could rub. The force-fit seating offers excellent holding force for e-chains® and e-tubes.

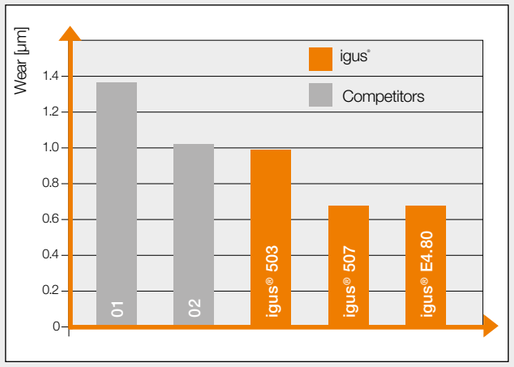

Wear of plastic separators: with igus® separators, the wear on the cables could be almost halved

More durable thanks to plastic crossbars

igus® tests have shown that the abrasion of the cables is the lowest in e-chains® with igus® plastic crossbars, which have a rounded cable-friendly design. The holding force is very high. Crossbars made from a wide variety of materials were subjected to a tensile test at the igus® testing facility. igus® plastic crossbars are flexible and strong.

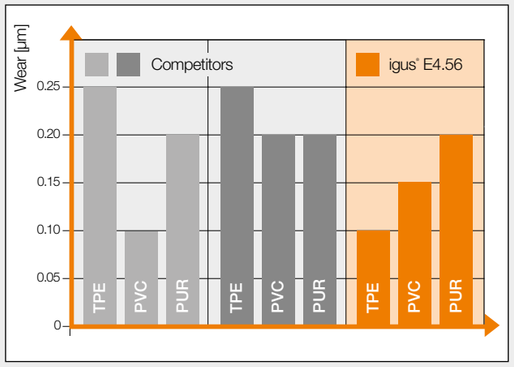

Cable wear on plastic crossbars - ideal service life with igus® plastic crossbars

Increase the service life of the cable with optimised, rounded igus® separators and cable-friendly plastic crossbars

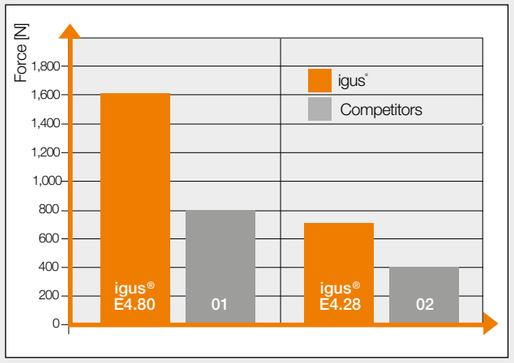

Closing force comparison of plastic/aluminium crossbars - Best service life and highest holding force of the igus® crossbars

e-spool® flex 2.0 advantages

Easy handling: pull-out force is almost constant and secure locking

Without interruption: for energy, data, fluids and air

Assembly-friendly: easy replacement of the cable, even with connectors fitted

Space-saving: cable retracts into a compact unit

Continuous panel feed - e-spool® flex 2.0

The e-spool® flex 2.0 is the igus® cable drum without a slip ring. Cables diameters from 5mm to 15mm can be used. The cable is always safely routed through a feed-through to ensure that it is properly wound up at all times.

- Without interruption (no slip ring), for energy, data, fluids and air
- Space-saving
- Universal assembly
- Constant tensile strain on the cable
- Locking mechanism
- Easy in case of repair
- Simple replacement of the fitted cable, therefore adaptable
- Four configurations, adaptable to the respective requirements

Available from stock. Ready to ship in 5 - 10 business days*

*Average time before the ordered goods are dispatched.

Product range

The e-spool® flex 2.0 the cable drum without a slip ring

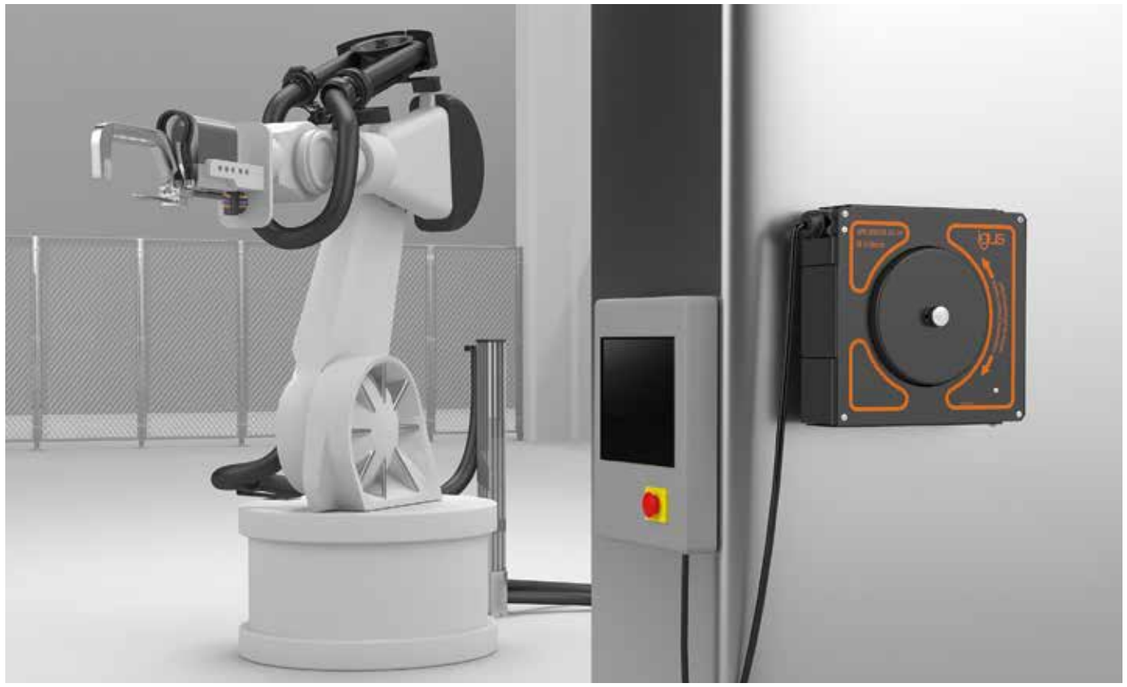

e-spool® flex 2.0 | Product range

Part No. e-spool® flex 2.0	Cable diameter from - to ≤ [mm]	Extension length ≤ [m]	Required cable length inside the chain [m]	Weight [kg]
SPF.250.08.01.*	5 - 8	15	4.5	≈ 8.0
SPF.250.11.01.*	8 - 11	10	3.3	≈ 8.0
SPF.250.15.01.*	11 - 15	5	2.4	≈ 8.0

***Note:** Part can be combined with four different drives (**H/T/SP/SB**).

Four drive form options | Overview

Drive options	Index	Meaning
A hand crank	**H**	**H**and
For cordless screwdriver*	**T**	**T**ool
With retaining spring and locking mechanism	**SP**	**S**pring with **P**osition Hold
With retaining spring, locking mechanism and retraction brake	**SB**	**S**pring with Position Hold and **B**reak

* Available upon request Delivery time upon request.

Note: Please consider VDE 0298 part 5 (current carrying capacity and conversion factors for wound cables) when selecting your cables and using e-spool® flex.

Technical data

e-spool® flex 2.0 design

1

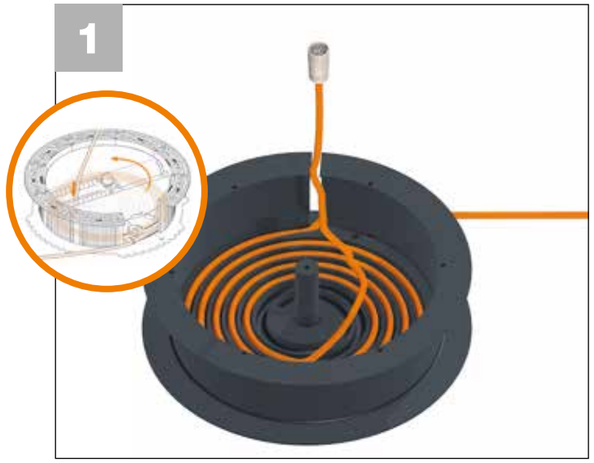

Cables or hoses are inserted into the e-spool® in a spiral pattern

2

The e-spool® flex in detail from the inside (from left): housing, spiral guide, cables/hoses, winding housing

3

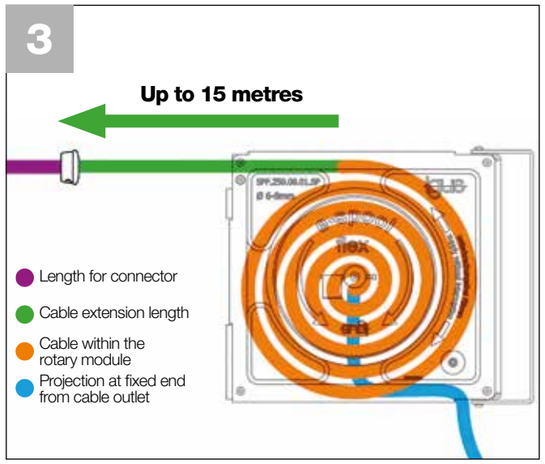

Cable/hoses inserted in the spiral guide - extension length up to 15m possible

4

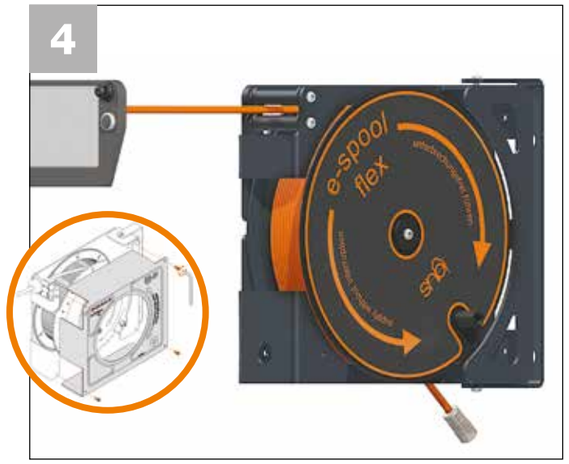

The e-spool® flex 2.0 system is simple to set up, making it easy and quick to replace the cable if necessary

Assembly instructions - the illustrated assembly aid enables you to assemble the e-spool® flex 2.0 quickly and professionally ▶ www.igus.eu/e-spool-flex

Technical data

e-spool® flex 2.0 comparison test

Max. speed	**≤ 1m/s**
Maximum acceleration	**≤ 1m/s²**
Permitted temperature °C - e-spool® standard	**0°C / +70°C**
Permitted temperature °C - e-spool® HD	**0°C / +80°C**
Maximum fill weight, vertical	**≤ 1kg/m**

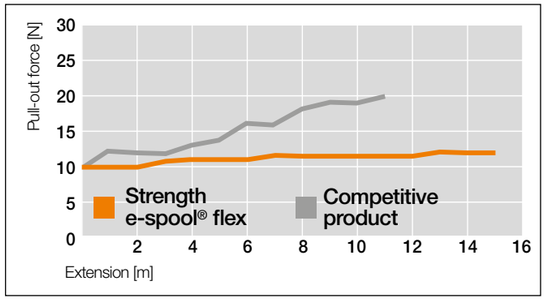

Comparison test: Pull-out forces e-spool® flex vs. competitive product

In its test laboratory, the largest in the industry, igus® compared the e-spool® flex with a competing product. The test evaluated the two products' pull-out forces. **The results** showed that the e-spool® pull-out forces were about 10 newtons, while those of the competing product were almost twice that.

Advantages of the continuous panel feed e-spool® flex 2.0

Avoid it with the newly developed cable drum for control panels. Since the new solution does not use slip rings, media, data and the power and signal supply of the emergency stop button can also be integrated into the system.

Download whitepaper ▶ www.igus.eu/e-spool-flex

igus® chainflex® for robots

Twistable cables for robots and 3D movements

36-month chainflex® guarantee -
Guaranteed service life for predictable reliability
▶ Selection table page 188

Guarantee igus chainflex 36 up to 36 months guarantee

igus 36-month chainflex cable guarantee and service life calculator based on 2 billion test cycles per year

Selection table

Cables for robots

chainflex® Cable	Jacket	Shield	Bend radius e-chain® [factor x d]	Temperature e-chain® from/to [°C]	Approvals and standards	Oil-resistant	Torsion-resistant	v max. [°/s] twisted	a max. [°/s²] twisted	Page
Control cables										
CF77.UL.D	PUR		6.8	-25/+80		✓	✓	180	60	190
CFROBOT2	PUR	✓	10	-25/+80		✓	✓	180	60	194
Data cable										
CFROBOT3	PUR	✓	10	-25/+80		✓	✓	180	60	196
Measuring system cable										
CFROBOT4	PUR	✓	10	-25/+80		✓	✓	180	60	198
Fibre Optic Cables										
CFROBOT5	TPE		10	-35/+80		✓	✓	180	60	202
Motor cables										
CFROBOT6	PUR		10	-25/+80		✓	✓	180	60	204
CFROBOT7	PUR	✓	10	-25/+80		✓	✓	180	60	206
Spindle cable/Single core										
CFROBOT	TPE	✓	10	-35/+90		✓	✓	180	60	210
Bus cables										
CFROBOT8	PUR	✓	10	-25/+70		✓	✓	180	60	212
CFROBOT8.PLUS	PUR	✓	10	-25/+70		✓	✓	360	60	216
Hybrid cable										
CFROBOT9	PUR	✓	10	-25/+80		✓	✓			220

Delivery time 24hrs or today.
Delivery time means time until goods are shipped.

With the help of the service life calculator, you can quickly and easily calculate the expected service life of chainflex® cables specifically for your application ▶ www.igus.eu/chainflexlife

igus UL-verified chainflex® guarantee promise ▶ www.igus.eu/ul-verified

chainflex®
Cables for robots

Ever more complex sequences of movements in industrial applications demand twistable or multi-axis flexible cables with a long service life, similar to the classic chainflex® cables for use in linear e-chain systems®. Stranding, structure, shields and jacket materials must compensate both for major changes in bending load and changes in diameter due to torsional movements. To achieve this, different "soft" structural elements e.g. rayon fibres, PTFE elements or filling elements that absorb torsion forces are used in chainflex® CFROBOT cables.
Special demands are made on the braided shielding in torsion cables. Torsion-optimised shield structures are chosen that can carry out the necessary compensatory movements thanks to special PTFE liners.
With twistable bus cables in particular, the transmission characteristics such as attenuation, cable capacitance and signal quality must remain within very tight tolerance ranges over the whole service life. This is achieved through the use of particularly torsion optimised insulating materials and mechanical attenuation elements with matching capacitance values.

The highly abrasion-resistant, halogen-free and flame-resistantPUR jacket material in motor, hybrid/control cables and bus cables protects the torsion-optimised stranded elements from possible damage. The highly abrasion-resistant, halogen-free TPE jacket achieves the special requirements of the twistable FOC and individual as well as the single core cables.
Unlike cables for linear e-chain systems®, the mechanical stress on these cables is in the combination of bending, torsion and centrifugal forces that cannot usually be determined by design or during use by means of measurement. For this reason, and unlike the situation with linear e-chain® applications, a clear "yes/no" statement cannot be made about the use of a particular cable in torsion applications. To enable evaluation to take place, based on sensible and comparable test results, the igus® "torsion test standard" was developed.
According to this standard, all chainflex® CFROBOT cables of a triflex® energy chain are twisted with a fixed point distance of one metre and a torsion of ±180° at least 5 million times.

chainflex®
Tested: Torsion

In addition, a test is carried out on a test bench with a chain length of approx. 2,500mm with 270° torsion with an extreme load through centrifugal forces and heavy blows such as those that can occur on an industrial robot. All the non-shielded, gusset-filling extruded standard chainflex® control cables of the series CF130.UL, CF5, CF9 and CF9.UL correspond to the above igus® standard and have been approved for use in torsion applications.

The following twistable CFROBOT cable types are currently available:
- Control cable (shielded and unshielded)
- Data and measuring system cables
- Fibre Optic Cables
- Motor and servo cables
- Bus cables
- Hybrid cables

We can also offer you chainflex® CFROBOT cables pre-harnessed with the connectors of your choice as a readycable®, or as a ready-to-install readychain® system.

chainflex® guarantee
Guaranteed service life

chainflex® guarantee
Guaranteed service life

	chainflex® cables	Temperature, from/to [°C]	v max. [°/s] twisted	a max. [°/s²] twisted	Minimum bend radius [factor x d] 5 million cycles *	Minimum bend radius [factor x d] 7.5 million cycles *	Minimum bend radius [factor x d] 10 million cycles *	Page
Twistable cables								
Control cables								
	CF77.UL.D	-25 / -15 -15 / +70 +70 / +80	180	60	±150 ±180 ±150	±90 ±120 ±90	±30 ±60 ±30	190
	CFROBOT2	-25 / -15 -15 / +70 +70 / +80	180	60	±150 ±180 ±150	±90 ±120 ±90	±30 ±60 ±30	194
Data cable								
	CFROBOT3	-25 / -15 -15 / +70 +70 / +80	180	60	±150 ±180 ±150	±90 ±120 ±90	±30 ±60 ±30	196
Measuring system cable								
	CFROBOT4	-25 / -15 -15 / +70 +70 / +80	180	60	±150 ±180 ±150	±90 ±120 ±90	±30 ±60 ±30	198
Fibre Optic Cables								
	CFROBOT5	-25 / -15 -15 / +70 +70 / +80	180	60	±150 ±180 ±150	±90 ±120 ±90	±30 ±60 ±30	202
Motor cables								
	CFROBOT6	-25 / -15 -15 / +70 +70 / +80	180	60	±150 ±180 ±150	±90 ±120 ±90	±30 ±60 ±30	204
	CFROBOT7	-25 / -15 -15 / +70 +70 / +80	180	60	±150 ±180 ±150	±90 ±120 ±90	±30 ±60 ±30	206
Spindle cable/Single core								
	CFROBOT	-35 / -25 -15 / +80 +80 / +90	180	60	±150 ±180 ±150	±90 ±120 ±90	±30 ±60 ±30	210
Bus cables								
	CFROBOT8	-25 / -15 -15 / +60 +60 / +70	180	60	±150 ±180 ±150	±90 ±120 ±90	±30 ±60 ±30	212
	CFROBOT8.PLUS	-25 / -15 -15 / +60 +60 / +70	360	60	±330 ±360 ±330	±240 ±270 ±240	±150 ±180 ±150	216
Hybrid cable								
	CFROBOT9	-25 / -15 -15 / +70 +70 / +80	180	60	±150 ±180 ±150	±90 ±120 ±90	±30 ±60 ±30	220

* Higher number of double strokes? Calculate service life online: ▶ www.igus.eu/chainflexlife

chainflex® CF77.UL.D

Control cable | PUR

Example image

10 million Cycles guaranteed

6.8 x d Bend radius e-chain®

±180°/m Torsion angle

- For torsion applications
- PUR outer jacket
- Oil-resistant and coolant-resistant
- Flame-retardant
- PVC and halogen-free
- Notch-resistant
- Hydrolysis and microbe-resistant

Dynamic information

Bend radius	flexible twisted	minimum 6.8 x d
	fixed	minimum 4 x d
Temperature	flexible twisted	-25°C up to +80°C
	fixed	-50°C up to +80°C (following DIN EN 50305)
v max.	twisted	180°/s
a max.	twisted	60°/s²
Travel	Robots and 3D movements, Class 1	
Torsion	Torsion ±180°, with 1m cable length, Class 3 (except for 5-core types ≥ 4.0mm² ▶ **Product range table**)	

Cable structure

Conductor	Finely stranded conductor consisting of bare copper wires (following DIN EN 60228).
Core insulation	Mechanically high-quality TPE mixture.
Core structure	**Number of cores < 12:** Cores wound in a layer with short pitch length. **Number of cores ≥ 12:** Cores wound in bundles which are then wound around a high tensile strength centre element, all with optimised short pitch lengths and directions. Especially low-torsion structure.
Core identification	**Cores < 0.5mm²:** Colour code in accordance with DIN 47100. **Cores ≥ 0.5mm²:** Black cores with white numbers, one green-yellow core. **CF77.UL.02.03.INI:** brown, blue, black **CF77.UL.03.04.INI:** brown, blue, black, white **CF77.UL.03.05.INI:** brown, blue, black, white, green-yellow
Outer jacket	Low-adhesion, halogen-free, highly abrasion-resistant PUR mixture, adapted to suit the requirements in e-chains® (following DIN EN 50363-10-2) Colour: Window-grey (similar to RAL 7040) Variants ▶ **Product range table**

Electrical information

Nominal voltage	300/500V (following DIN VDE 0298-3) **Number of cores < 12:** **Cores < 0.5mm²:** 300V (following UL) **Cores ≥ 0.5mm²:** 1000V (following UL) **Number of cores ≥ 12:** 1000V (following UL)
Testing voltage	2,000V (following DIN EN 50395)

Properties and approvals

UV resistance	Medium

EPLAN download, configurators ▶ www.igus.eu/CF77.UL.D

Class 5.1.3.3

Load	low	1 2 3 4 **5** 6 7 highest
Travel	unsupported	**1** 2 3 4 5 6 ≥ 400 m
Oil resistance	none	1 2 **3** 4 highest
Torsion	none	1 2 **3** 4 ±360°

Oil resistance	Oil-resistant (following DIN EN 50363-10-2), Class 3
Offshore	MUD-resistant following NEK 606 - as of 2009
Flame-retardant	According to IEC 60332-1-2, Cable Flame, VW-1, FT1, FT2 / Horizontal Flame
Silicone-free	Free from silicone which can affect paint adhesion (following PV 3.10.7 - status 1992)
Halogen-free	Following DIN EN 60754
UL Verified	Certificate no. B129699: "igus 36-month chainflex cable guarantee and service life calculator based on 2 billion test cycles per year"
UL/CSA AWM	See data sheet for details ▶ **www.igus.eu/CF77.UL.D**
NFPA	Following NFPA 79-2018, chapter 12.9
DNV	Type Approval Certificate TAE00003X1
EAC	Certificate No. RU C-DE.ME77.B.00300/19
REACH	In accordance with Regulation (EC) No. 1907/2006 (REACH)
Lead-free	Following 2011/65/EC (RoHS-II/RoHS-III)
Cleanroom	According to ISO Class 1, material/cable tested by IPA according to DIN EN ISO standard 14644-1
DESINA	According to VDW, DESINA standardisation
CE	Following 2014/35/EC
UKCA	In accordance with the valid regulations of the United Kingdom (as at 08/2021)

Guaranteed service life (details ▶ Page 188)

Cycles*	5 million	7.5 million	10 million
Temperature, from/to [°C]	Torsion max. [°/m]	Torsion max. [°/m]	Torsion max. [°/m]
-25/-15	±150	±90	±30
-15/+70	±180	±120	±60
+70/+80	±150	±90	±30

* Higher number of double strokes? Service life calculation online ▶ www.igus.eu/chainflexlife

Typical application areas

- For heavy-duty applications, Class 5
- Especially for robots and 3D movements, Class 1
- Almost unlimited resistance to oil, Class 3
- Torsion ±180°, with 1m cable length, Class 3
- Indoor and outdoor applications with average UV radiation.
- Robots, handling, spindle drives

Guarantee igus chainflex 36 up to 36 months guarantee

igus 36-month chainflex cable guarantee and service life calculator based on 2 billion test cycles per year

UL-verified chainflex® guarantee promise ▶ www.igus.eu/ul-verified

chainflex® CF77.UL.D

Control cable | PUR

Class 5.1.3.3

Load	low 1 2 3 4 **5** 6 7 highest	
Travel	unsupported **1** 2 3 4 5 6 ≥ 400 m	
Oil resistance	none 1 2 **3** 4 highest	
Torsion	none 1 2 **3** 4 ±360°	

Example image

Part No.	Number of cores and conductor nominal cross section [mm²]	Outer diameter (d) max. [mm]	Copper index [kg/km]	Weight [kg/km]
CF77.UL.02.03.INI [12]	3x0.25	5.0	9	29
CF77.UL.02.04.D	4x0.25	5.5	11	35
CF77.UL.02.05.D	5x0.25	6.0	13	39
CF77.UL.02.07.D	7x0.25	6.5	18	51
CF77.UL.02.12.D	12x0.25	9.0	32	78
CF77.UL.02.18.D	18x0.25	10.5	47	127
CF77.UL.02.25.D	25x0.25	11.5	63	155
CF77.UL.03.04.INI [12]	4x0.34	6.0	14	37
CF77.UL.03.05.INI [12]	5x0.34	6.0	18	36
CF77.UL.03.05.INI.D	5x0.34	6.0	18	36
CF77.UL.05.04.D	4G0.5	6.0	21	46
CF77.UL.05.05.D	5G0.5	6.5	26	53
CF77.UL.05.07.D	7G0.5	7.5	39	78
CF77.UL.05.12.D	12G0.5	10.0	63	130
CF77.UL.05.18.D	18G0.5	12.0	94	184
CF77.UL.05.25.D	25G0.5	14.0	129	243
CF77.UL.05.30.D	30G0.5	15.0	155	315
CF77.UL.07.03.D	3G0.75	6.5	23	52
CF77.UL.07.04.D	4G0.75	7.0	31	59
CF77.UL.07.05.D	5G0.75	7.5	38	71
CF77.UL.07.07.D	7G0.75	8.5	54	100
CF77.UL.07.12.D	12G0.75	12.0	91	180
CF77.UL.07.18.D	18G0.75	13.5	134	239
CF77.UL.07.20.D	20G0.75	14.5	149	269
CF77.UL.07.25.D	25G0.75	16.0	186	336
CF77.UL.07.36.D	36G0.75	19.0	279	506
CF77.UL.07.42.D	42G0.75	21.0	341	580
CF77.UL.10.02.D	2x1.0	6.5	21	51
CF77.UL.10.03.D	3G1.0	6.5	31	58
CF77.UL.10.04.D	4G1.0	7.0	41	73
CF77.UL.10.05.D	5G1.0	8.0	50	90
CF77.UL.10.07.D	7G1.0	9.0	71	120
CF77.UL.10.12.D	12G1.0	12.5	120	220
CF77.UL.10.18.D	18G1.0	15.0	179	314
CF77.UL.10.25.D	25G1.0	17.5	248	431

[12] Colour outer jacket: Colza yellow (similar to RAL 1021)

Note: The given outer diameters are maximum values and may tend toward lower tolerance limits.
G = with green-yellow earth core **x =** without earth core

Part No.	Number of cores and conductor nominal cross section [mm²]	Outer diameter (d) max. [mm]	Copper index [kg/km]	Weight [kg/km]
CF77.UL.10.42.D	42G1.0	22.5	433	699
CF77.UL.15.03.D	3G1.5	7.0	46	71
CF77.UL.15.04.D	4G1.5	7.5	61	88
CF77.UL.15.05.D	5G1.5	8.0	75	105
CF77.UL.15.07.D [17]	7G1.5	9.5	105	152
CF77.UL.15.12.D	12G1.5	13.0	179	297
CF77.UL.15.18.D	18G1.5	17.0	268	405
CF77.UL.15.25.D	25G1.5	19.5	297	564
CF77.UL.15.36.D	36G1.5	23.5	551	848
CF77.UL.25.03.D	3G2.5	8.5	75	132
CF77.UL.25.04.D	4G2.5	9.5	95	167
CF77.UL.25.05.D	5G2.5	10.0	124	196
CF77.UL.25.07.D [17]	7G2.5	12.0	174	270
CF77.UL.25.12.D	12G2.5	17.0	297	479

[17] When using the cables with "7G1.5mm²" and "7G2.5mm²" minimum bend radius must be 17.5xd with gliding travel distance ≥ 5m.

Note: the given outer diameters are maximum values and may tend toward lower tolerance limits.
G = with green-yellow earth core **x =** without earth core

Cables available in the chainflex® CASE

Simple savings on delivery, storage space and re-ordering with the chainflex® CASE - ship'n store by igus®.
More information ▶ www.igus.eu/cf-case

Order example: CF77.UL.02.04.D **- to your desired length (0.5m steps)**
CF77.UL.D **chainflex® series** .02 **Code nominal cross section** .04 **Number of cores**

Online order ▶ www.igus.eu/CF77.UL.D

Delivery time 24hrs or today.
Delivery time means time until goods are shipped.

Guarantee igus chainflex 36 — igus 36-month chainflex cable guarantee and service life calculator based on 2 billion test cycles per year

chainflex® CFROBOT2

Control cable | PUR

Example image

10,000,000 Cycles guaranteed

10 x d Bend radius e-chain®

±180°/m Torsion angle

- For torsion applications
- PUR outer jacket
- Shielded
- Oil-resistant and coolant-resistant
- Flame-retardant
- PVC and halogen-free
- Notch-resistant
- Hydrolysis and microbe-resistant

Dynamic information

Bend radius	**flexible twisted**	minimum 10 x d
	fixed	minimum 5 x d
Temperature	**flexible twisted**	-25°C up to +80°C
	fixed	-50°C up to +80°C (following DIN EN 50305)
v max.	**twisted**	180°/s
a max.	**twisted**	60°/s²
Travel	Robots and 3D movements, Class 1	
Torsion	Torsion ±180°, with 1m cable length, Class 3	

Cable structure

Conductor	Stranded conductor in especially bending-resistant version consisting of bare copper wires (following DIN EN 60228).
Core insulation	Mechanically high-quality TPE mixture.
Core identification	Black cores with white digit, one green-yellow core.
Overall shield	Extremely torsion-resistant tinned braided copper shield. Coverage approx. 85% optical
Outer jacket	Low-adhesion, halogen-free, highly abrasion-resistant PUR mixture, adapted to suit the requirements in e-chains® (following DIN EN 50363-10-2) Colour: Steel blue (similar to RAL 5011)

Electrical information

Nominal voltage	300/500V (following DIN VDE 0298-3) 300V (following UL)
Testing voltage	2,000V (following DIN EN 50395)

Properties and approvals

UV resistance	High
Oil resistance	Oil-resistant (following DIN EN 50363-10-2), Class 3
Flame-retardant	According to IEC 60332-1-2, Cable Flame, VW-1, FT1, FT2 / Horizontal Flame
Silicone-free	Free from silicone which can affect paint adhesion (following PV 3.10.7 - status 1992)
Halogen-free	Following DIN EN 60754

EPLAN download, configurators ▶ www.igus.eu/CFROBOT2

Class 6.1.3.3

Load	low	1 2 3 4 5 **6** 7 highest
Travel	unsupported	**1** 2 3 4 5 6 ≥ 400 m
Oil resistance	none	1 2 **3** 4 highest
Torsion	none	1 2 **3** 4 ±360°

UL Verified	Certificate No. B129699: "igus 36-month chainflex cable guarantee and service life calculator based on 2 billion test cycles per year" See data sheet for details ▶ **www.igus.eu/CFROBOT2**
UL/CSA AWM	
NFPA	Following NFPA 79-2018, chapter 12.9
EAC	Certificate No. RU C-DE.ME77.B.00300/19
REACH	In accordance with Regulation (EC) No. 1907/2006 (REACH)
Lead-free	Following 2011/65/EC (RoHS-II/RoHS-III)
Cleanroom	According to ISO Class 1. The outer jacket material of this series complies with CF77.UL.05.12.D - tested by IPA according to standard DIN EN ISO 14644-1
CE	Following 2014/35/EC
UKCA	In accordance with the valid regulations of the United Kingdom (as at 08/2021)

Guaranteed service life (details ▶ Page 188)

Cycles*	5 million	7.5 million	10 million
Temperature, from/to [°C]	Torsion max. [°/m]	Torsion max. [°/m]	Torsion max. [°/m]
-25/-15	±150	±90	±30
-15/+70	±180	±120	±60
+70/+80	±150	±90	±30

* Higher number of double strokes? Service life calculation online ▶ www.igus.eu/chainflexlife

Typical application areas

- For heaviest duty applications with torsion movements, Class 6
- Especially for robots and 3D movements, Class 1
- Almost unlimited resistance to oil, Class 3
- Torsion ±180°, with 1m cable length, Class 3
- Indoor and outdoor applications, UV resistant
- Robots, handling, spindle drives

Part No.	Number of cores and conductor nominal cross section [mm²]	Outer diameter (d) max. [mm]	Copper index [kg/km]	Weight [kg/km]
CFROBOT2.07.04.C	(4G0.75)C	8.0	43	78
CFROBOT2.07.05.C	(5G0.75)C	8.5	51	90
CFROBOT2.07.07.C	(7G0.75)C	10.0	71	120
CFROBOT2.07.12.C	(12G0.75)C	14.0	122	214
CFROBOT2.07.18.C	(18G0.75)C	16.5	185	301

Note: the given outer diameters are maximum values and may tend toward lower tolerance limits.
G = with green-yellow earth core **x =** without earth core

UL-verified chainflex® guarantee promise ▶ www.igus.eu/ul-verified

chainflex® CFROBOT3

Data cable | PUR

10,000,000 Cycles guaranteed

10 x d Bend radius e-chain®

±180°/m Torsion angle

- For torsion applications
- PUR outer jacket
- Shielded
- Oil-resistant and coolant-resistant
- Flame-retardant
- Notch-resistant
- Hydrolysis and microbe-resistant

Dynamic information

Bend radius	flexible twisted	minimum 10 x d
	fixed	minimum 5 x d
Temperature	flexible twisted	-25°C up to +80°C
	fixed	-50°C up to +80°C (following DIN EN 50305)
v max.	twisted	180°/s
a max.	twisted	60°/s²
Travel	Robots and 3D movements, Class 1	
Torsion	Torsion ±180°, with 1m cable length, Class 3	

Cable structure

Conductor	Stranded conductor in especially bending-resistant version consisting of bare copper wires (following DIN EN 60228).
Core insulation	Mechanically high-quality TPE mixture.
Core structure	2 cores each stranded in pairs with short lay lengths, core pairs also stranded with short lay lengths.
Core identification	Colour code in accordance with DIN 47100.
Overall shield	Extremely torsion-resistant tinned braided copper shield. Coverage approx. 85% optical
Outer jacket	Low-adhesion, halogen-free, highly abrasion-resistant PUR mixture, adapted to suit the requirements in e-chains® (following DIN EN 50363-10-2) Colour: Steel blue (similar to RAL 5011)

Electrical information

Nominal voltage	300/500V (following DIN VDE 0298-3) 300V (following UL)
Testing voltage	2,000V (following DIN EN 50395)

Properties and approvals

UV resistance	High
Oil resistance	Oil-resistant (following DIN EN 50363-10-2), Class 3
Flame-retardant	According to IEC 60332-1-2, Cable Flame, VW-1, FT1, FT2 / Horizontal Flame
Silicone-free	Free from silicone which can affect paint adhesion (following PV 3.10.7 - status 1992)

Example image

Class 6.1.3.3

Load	low	1 2 3 4 5 **6** 7 highest
Travel	unsupported	**1** 2 3 4 5 6 ≥ 400 m
Oil resistance	none	1 2 **3** 4 highest
Torsion	none	1 2 **3** 4 ±360°

UL Verified	Certificate No. B129699: "igus 36-month chainflex cable guarantee and service life calculator based on 2 billion test cycles per year" See data sheet for details ▶ www.igus.eu/CFROBOT3
UL/CSA AWM	
NFPA	Following NFPA 79-2018, chapter 12.9
EAC	Certificate No. RU C-DE.ME77.B.00300/19
REACH	In accordance with Regulation (EC) No. 1907/2006 (REACH)
Lead-free	Following 2011/65/EC (RoHS-II/RoHS-III)
Cleanroom	According to ISO Class 1. The outer jacket material of this series complies with CF77.UL.05.12.D - tested by IPA according to standard DIN EN ISO 14644-1
CE	Following 2014/35/EC
UKCA	In accordance with the valid regulations of the United Kingdom (as at 08/2021)

Guaranteed service life (details ▶ Page 188)

Cycles*	5 million	7.5 million	10 million
Temperature, from/to [°C]	Torsion max. [°/m]	Torsion max. [°/m]	Torsion max. [°/m]
-25/-15	±150	±90	±30
-15/+70	±180	±120	±60
+70/+80	±150	±90	±30

* Higher number of double strokes? Service life calculation online ▶ www.igus.eu/chainflexlife

Typical application areas

- For heaviest duty applications with torsion movements, Class 6
- Especially for robots and 3D movements, Class 1
- Almost unlimited resistance to oil, Class 3
- Torsion ±180°, with 1m cable length, Class 3
- Indoor and outdoor applications, UV resistant
- Robots, handling, spindle drives

Part No.	Number of cores and conductor nominal cross section [mm²]	Outer diameter (d) max. [mm]	Copper index [kg/km]	Weight [kg/km]
CFROBOT3.02.03.02	(3x(2x0.25))C	9.0	33	84
CFROBOT3.02.04.02	(4x(2x0.25))C	10.5	38	103
CFROBOT3.02.06.02	(6x(2x0.25))C	11.5	52	127
CFROBOT3.02.08.02	(8x(2x0.25))C	13.5	66	170
CFROBOT3.05.05.02	(5x(2x0.5))C	12.5	80	170

Note: the given outer diameters are maximum values and may tend toward lower tolerance limits.
G = with green-yellow earth core **x =** without earth core

Cables available in the chainflex® CASE
Simple savings on delivery, storage space and re-ordering with the chainflex® CASE - ship'n store by igus®.
More information ▶ www.igus.eu/cf-case

chainflex® CFROBOT4

Measuring system cable | PUR

Example image

10,000,000 Cycles guaranteed

10 x d Bend radius e-chain®

±180°/m Torsion angle

- For torsion applications
- PUR outer jacket
- Shielded
- Oil-resistant and coolant-resistant
- Flame-retardant
- PVC and halogen-free
- Notch-resistant
- Hydrolysis and microbe-resistant

Dynamic information

Bend radius	**flexible twisted**	minimum 10 x d
	fixed	minimum 5 x d
Temperature	**flexible twisted**	-25°C up to +80°C
	fixed	-50°C up to +80°C (following DIN EN 50305)
v max.	**twisted**	180°/s
a max.	**twisted**	60°/s²
Travel	Robots and 3D movements, Class 1	
Torsion	Torsion ±180°, with 1m cable length, Class 3	

Cable structure

Conductor	Stranded conductor in an especially flexible design consisting of tinned copper wires (following DIN EN 60228).
Core insulation	Mechanically high-quality TPE mixture.
Core identification	According to measurement system specification. ▶ **Product range table**
Element shield	Extremely torsion-resistant tinned braided copper shield.
Overall shield	Extremely torsion-resistant tinned braided copper shield. Coverage approx. 80% optical
Outer jacket	Low-adhesion, halogen-free, highly abrasion-resistant PUR mixture, adapted to suit the requirements in e-chains® (following DIN EN 50363-10-2) Colour: Steel blue (similar to RAL 5011) Variants ▶ **Product range table**

Electrical information

Nominal voltage	50V 30V (following UL)
Testing voltage	500V

EPLAN download, configurators ▶ www.igus.eu/CFROBOT4

igus

Class 6.1.3.3

Load	low	1 2 3 4 5 **6** 7 highest
Travel	unsupported	**1** 2 3 4 5 6 ≥ 400 m
Oil resistance	none	1 2 **3** 4 highest
Torsion	none	1 2 **3** 4 ±360°

Properties and approvals

UV resistance	High
Oil resistance	Oil-resistant (following DIN EN 50363-10-2), Class 3
Flame-retardant	According to IEC 60332-1-2, Cable Flame, VW-1, FT1, FT2 / Horizontal Flame
Silicone-free	Free from silicone which can affect paint adhesion (following PV 3.10.7 - status 1992)
Halogen-free	Following DIN EN 60754
UL Verified	Certificate no. B129699: "igus 36-month chainflex cable guarantee and service life calculator based on 2 billion test cycles per year"
UL/CSA AWM	See data sheet for details ▶ **www.igus.eu/CFROBOT4**
NFPA	Following NFPA 79-2018, chapter 12.9
EAC	Certificate No. RU C-DE.ME77.B.00295/19
REACH	In accordance with Regulation (EC) No. 1907/2006 (REACH)
Lead-free	Following 2011/65/EC (RoHS-II/RoHS-III)
Cleanroom	According to ISO Class 1. The outer jacket material of this series complies with CF77.UL.05.12.D - tested by IPA according to standard DIN EN ISO 14644-1
CE	Following 2014/35/EC
UKCA	In accordance with the valid regulations of the United Kingdom (as at 08/2021)

Guaranteed service life (details ▶ Page 188)

Cycles*	5 million	7.5 million	10 million
Temperature, from/to [°C]	Torsion max. [°/m]	Torsion max. [°/m]	Torsion max. [°/m]
-25/-15	±150	±90	±30
-15/+70	±180	±120	±60
+70/+80	±150	±90	±30

* Higher number of double strokes? Service life calculation online ▶ www.igus.eu/chainflexlife

Typical application areas

- For heaviest duty applications with torsion movements, Class 6
- Especially for robots and 3D movements, Class 1
- Almost unlimited resistance to oil, Class 3
- Torsion ±180°, with 1m cable length, Class 3
- Indoor and outdoor applications, UV resistant
- Robots, handling, spindle drives

igus UL-verified chainflex® guarantee promise ▶ www.igus.eu/ul-verified

chainflex® CFROBOT4

Measuring system cable | PUR

Class 6.1.3.3

Load	low 1 2 3 4 5 **6** 7	highest
Travel	unsupported **1** 2 3 4 5 6	≥ 400 m
Oil resistance	none 1 2 **3** 4	highest
Torsion	none 1 2 **3** 4	±360°

Example image

Part No.	Number of cores and conductor nominal cross section [mm²]	Outer diameter (d) max. [mm]	Copper index [kg/km]	Weight [kg/km]	Part No.	Core group	Colour code
CFROBOT4.001	(3x(2x0.14)C+(4x0.14)+(2x0.5))C	10.5	62	115	**CFROBOT4.001**	3x(2x0.14)C	green/yellow, black/brown, red/orange
						4x0.14	grey/blue/white-yellow/white-black
						2x0.5	brown-red/brown-blue
CFROBOT4.006	(3x(2x0.14C+(4x0.14)+(4x0.22)+(2x0.5))C	11.5	74	135	**CFROBOT4.006**	3x(2x0.14)C	green/yellow, black/brown, red/orange
						(4x0.14)	grey/blue/white-yellow/white-black
						(4x0.22)	yellow-brown/grey-brown/green-black/green-red
						(2x0.5)	brown-red/brown-blue
CFROBOT4.009	(4x(2x0.25)+(2x0.5))C	9.0	48	90	**CFROBOT4.009**	4x(2x0.25)	brown/green, blue/violet, grey/pink, red/black
						2x0.5	white, brown
CFROBOT4.015	(4x(2x0.14)+4x0.5)C	9.0	49	91	**CFROBOT4.015**	4x(2x0.14)	brown/green, yellow/violet, grey/pink, red/black
						4x0.5	blue, white, brown-green, white-green
CFROBOT4.028 [13]	(2x(2x0.20)+(2x0.38))C	7.5	44	72	**CFROBOT4.028** [13]	2x(2x0.20)	green/yellow, pink/blue
						(2x0.38)	red/black

[13] Colour outer jacket: Yellow-green (RAL 6018)

Note: the given outer diameters are maximum values and may tend toward lower tolerance limits.
G = with green-yellow earth core **x =** without earth core

Cables available in the chainflex® CASE

Simple savings on delivery, storage space and re-ordering with the chainflex® CASE - ship'n store by igus®.
More information ▶ www.igus.eu/cf-case

Order example: CFROBOT4.009 **– to your desired length (0.5m steps)**
CFROBOT4 **chainflex® series** .009 **Code measuring system type**

Online order ▶ www.igus.eu/CFROBOT4

Delivery time 24hrs or today.
Delivery time means time until goods are shipped.

chainflex® CFROBOT5

Fibre Optic Cable | TPE

Example image

10,000,000 Cycles guaranteed

10 x d Bend radius e-chain®

±180°/m Torsion angle

- For torsion applications
- TPE outer jacket
- Oil and bio-oil-resistant
- UV-resistant
- Low-temperature-flexible
- Hydrolysis and microbe-resistant
- PVC and halogen-free

Dynamic information

Bend radius	**flexible twisted**	minimum 10 x d
	fixed	minimum 5 x d
Temperature	**flexible twisted**	-25°C up to +80°C
	fixed	-55°C up to +80°C (following DIN EN 50305)
v max.	**twisted**	180°/s
a max.	**twisted**	60°/s²
Travel	Robots and 3D movements, Class 1	
Torsion	Torsion ±180°, with 1m cable length, Class 3	

Cable structure

Conductor	50/125µm, 62.5/125µm bending-resistant solid glass fibre optic cores, with aramid strain relief elements.
Core structure	FOC cores wound with high-tensile aramid dampers around a glass-fibre reinforced plastic central element.
Core identification	▶ **Product range table**
Outer jacket	Low-adhesion, extremely abrasion-resistant and highly flexible TPE mixture, adapted to suit the requirements in e-chains®. Colour: jet black (similar to RAL 9005)

Properties and approvals

UV resistance	High
Oil resistance	Oil-resistant (following DIN EN 60811-404), bio-oil-resistant (following VDMA 24568 with Plantocut 8 S-MB tested by DEA), Class 4
Silicone-free	Free from silicone which can affect paint adhesion (following PV 3.10.7 - status 1992)
Halogen-free	Following DIN EN 60754
UL Verified	Certificate no. B129699: "igus 36-month chainflex cable guarantee and service life calculator based on 2 billion test cycles per year"
REACH	In accordance with Regulation (EC) No. 1907/2006 (REACH)
Lead-free	Following 2011/65/EC (RoHS-II/RoHS-III)

EPLAN download, configurators ▶ www.igus.eu/CFROBOT5

igus

Class 6.1.4.3

Load	low	1 2 3 4 5 **6** 7 highest
Travel	unsupported	**1** 2 3 4 5 6 ≥ 400 m
Oil resistance	none	1 2 3 **4** highest
Torsion	none	1 2 **3** 4 ±360°

Cleanroom	According to ISO Class 1. The outer jacket material of this series complies with CF9.15.07 - tested by IPA according to standard DIN EN ISO 14644-1
CE	Following 2014/35/EC
UKCA	In accordance with the valid regulations of the United Kingdom (as at 08/2021)

Guaranteed service life (details ▶ Page 188)

Cycles*	5 million	7.5 million	10 million
Temperature, from/to [°C]	Torsion max. [°/m]	Torsion max. [°/m]	Torsion max. [°/m]
-35/-25	±150	±90	±30
-25/+70	±180	±120	±60
+70/+80	±150	±90	±30

* Higher number of double strokes? Service life calculation online ▶ www.igus.eu/chainflexlife

Typical application areas

- For heaviest duty applications with torsion movements, Class 6
- Especially for robots and 3D movements, Class 1
- Almost unlimited resistance to oil, also with bio-oils, Class 4
- Torsion ±180°, with 1m cable length, Class 3
- Indoor and outdoor applications, UV resistant
- Robots, handling

Part No.	Number of fibres/ Fibre diameter/ Conductor nominal cross section	Outer diameter (d) max. [mm]	Weight [kg/km]
CFROBOT5.500 [11)]	2x62.5/125	8.5	53
CFROBOT5.501 [11)]	2x50/125	8.5	53

[11)] Phase-out model

Note: the given outer diameters are maximum values and may tend toward lower tolerance limits.
G = with green-yellow earth core **x** = without earth core

Part No.	Bandwidth [MHz x km] @ 650nm	Attenuation [dB/km] @ 650nm	Bandwidth [MHz x km] @ 850nm	Attenuation [dB/km] @ 850nm	Fibre identification
CFROBOT5.500 [11)]	≥ 200	≤ 3.0	≥ 500	≤ 0.7	orange with white numbers
CFROBOT5.501 [11)]	≥ 500	≤ 2.5	≥ 500	≤ 0.7	blue with white numbers

Cables available in the chainflex® CASE

Simple savings on delivery, storage space and re-ordering with the chainflex® CASE - ship'n store by igus®.
More information ▶ www.igus.eu/cf-case

Guarantee igus chainflex 36 up to 36 months guarantee

igus 36-month chainflex cable guarantee and service life calculator based on 2 billion test cycles per year

UL-verified chainflex® guarantee promise ▶ www.igus.eu/ul-verified

chainflex® CFROBOT6

Motor cable | PUR

Example image

10,000,000 Cycles guaranteed

10 x d Bend radius e-chain®

±180°/m Torsion angle

- For torsion applications
- PUR outer jacket
- Oil-resistant and coolant-resistant
- Flame-retardant
- PVC and halogen-free
- Notch-resistant
- Hydrolysis and microbe-resistant

Dynamic information

Bend radius	**flexible twisted**	minimum 10 x d
	fixed	minimum 5 x d
Temperature	**flexible twisted**	-25°C up to +80°C
	fixed	-55°C up to +80°C (following DIN EN 50305)
v max.	**twisted**	180°/s
a max.	**twisted**	60°/s²
Travel	Robots and 3D movements, Class 1	
Torsion	Torsion ±180°, with 1m cable length, Class 3	

Cable structure

Conductor	Stranded conductor in especially bending-resistant version consisting of bare copper wires (following DIN EN 60228).
Core insulation	Mechanically high-quality TPE mixture.
Core identification	Black cores with white numbers 1-2, one green-yellow core.
Outer jacket	Low-adhesion, halogen-free, highly abrasion-resistant PUR mixture, adapted to suit the requirements in e-chains® (following DIN EN 50363-10-2) Colour: Steel blue (similar to RAL 5011)

Electrical information

Nominal voltage	600/1000V (following DIN VDE 0298-3) 1,000V (following UL)
Testing voltage	4000V (following DIN EN 50395)

Properties and approvals

UV resistance	High
Oil resistance	Oil-resistant (following DIN EN 50363-10-2), Class 3
Flame-retardant	According to IEC 60332-1-2, Cable Flame, VW-1, FT1, FT2 / Horizontal Flame
Silicone-free	Free from silicone which can affect paint adhesion (following PV 3.10.7 - status 1992)
Halogen-free	Following DIN EN 60754

Class 6.1.3.3

Load	low	1 2 3 4 5 6 7 highest
Travel	unsupported	1 2 3 4 5 6 ≥ 400 m
Oil resistance	none	1 2 3 4 highest
Torsion	none	1 2 3 4 ±360°

UL Verified	Certificate no. B129699: "igus 36-month chainflex cable guarantee and service life calculator based on 2 billion test cycles per year" See data sheet for details ▶ www.igus.eu/CFROBOT6
UL/CSA AWM	
NFPA	Following NFPA 79-2018, chapter 12.9
EAC	Certificate no. RU C-DE.ME77.B.00863/20
REACH	In accordance with Regulation (EC) No. 1907/2006 (REACH)
Lead-free	Following 2011/65/EC (RoHS-II/RoHS-III)
Cleanroom	According to ISO Class 1. The outer jacket material of this series complies with CF77.UL.05.12.D - tested by IPA according to standard DIN EN ISO 14644-1
CE	Following 2014/35/EC
UKCA	In accordance with the valid regulations of the United Kingdom (as at 08/2021)

Guaranteed service life (details ▶ Page 188)

Cycles*	5 million	7.5 million	10 million
Temperature, from/to [°C]	Torsion max. [°/m]	Torsion max. [°/m]	Torsion max. [°/m]
-25/-15	±150	±90	±30
-15/+70	±180	±120	±60
+70/+80	±150	±90	±30

* Higher number of double strokes? Service life calculation online ▶ www.igus.eu/chainflexlife

Typical application areas

- For heaviest duty applications with torsion movements, Class 6
- Especially for robots and 3D movements, Class 1
- Almost unlimited resistance to oil, Class 3
- Torsion ±180°, with 1m cable length, Class 3
- Indoor and outdoor applications, UV resistant
- Robots, handling, spindle drives

Part No.	Number of cores and conductor nominal cross section [mm²]	Outer diameter (d) max. [mm]	Copper index [kg/km]	Weight [kg/km]
CFROBOT6.160.03 [11)]	3G16	18.0	475	578
CFROBOT6.250.03	3G25	22.0	737	896

[11)] Phase-out model

Note: the given outer diameters are maximum values and may tend toward lower tolerance limits.
G = with green-yellow earth core **x =** without earth core

chainflex® CFROBOT7

Motor cable | PUR

Example image

10,000,000 Cycles guaranteed

10 x d Bend radius e-chain®

±180°/m Torsion angle

- For torsion applications
- PUR outer jacket
- Shielded
- Oil-resistant and coolant-resistant
- Flame-retardant
- PVC and halogen-free
- Notch-resistant
- Hydrolysis and microbe-resistant

Dynamic information

Bend radius	flexible twisted	minimum 10 x d
	fixed	minimum 5 x d
Temperature	flexible twisted	-25°C up to +80°C
	fixed	-55°C up to +80°C (following DIN EN 50305)
v max.	twisted	180°/s
a max.	twisted	60°/s²
Travel	Robots and 3D movements, Class 1	
Torsion	Torsion ±180°, with 1m cable length, Class 3	

Cable structure

Conductor	Stranded conductor in especially bending-resistant version consisting of bare copper wires (following DIN EN 60228).
Core insulation	Mechanically high-quality TPE mixture.
Core identification	**Power cores:** Black cores with white numbers, one green-yellow core. **2 control pairs:** Black cores with white numbers. 1. Control core: 5 2. Control core: 6 3. Control core: 74. Control core: 8 **4 Control pairs:** Colour code in accordance with DIN 47100
Overall shield	Extremely torsion-resistant tinned braided copper shield. Coverage approx. 85% optical
Outer jacket	Low-adhesion, halogen-free, highly abrasion-resistant PUR mixture, adapted to suit the requirements in e-chains® (following DIN EN 50363-10-2) Colour: Steel blue (similar to RAL 5011)

Electrical information

Nominal voltage	600/1000V (following DIN VDE 0298-3) 1,000V (following UL)
Testing voltage	4000V (following DIN EN 50395)

EPLAN download, configurators ▶ www.igus.eu/CFROBOT7

Class 6.1.3.3

Load	low 1 2 3 4 5 **6** 7	highest
Travel	unsupported **1** 2 3 4 5 6	≥ 400 m
Oil resistance	none 1 2 **3** 4	highest
Torsion	none 1 2 **3** 4	±360°

Properties and approvals

UV resistance	High
Oil resistance	Oil-resistant (following DIN EN 50363-10-2), Class 3
Flame-retardant	According to IEC 60332-1-2, Cable Flame, VW-1, FT1, FT2 / Horizontal Flame
Silicone-free	Free from silicone which can affect paint adhesion (following PV 3.10.7 - status 1992)
Halogen-free	Following DIN EN 60754
UL Verified	Certificate no. B129699: "igus 36-month chainflex cable guarantee and service life calculator based on 2 billion test cycles per year"
UL/CSA AWM	See data sheet for details ▶ www.igus.eu/CFROBOT7
NFPA	Following NFPA 79-2018, chapter 12.9
EAC	Certificate no. RU C-DE.ME77.B.00863/20
REACH	In accordance with Regulation (EC) No. 1907/2006 (REACH)
Lead-free	Following 2011/65/EC (RoHS-II/RoHS-III)
Cleanroom	According to ISO Class 1. The outer jacket material of this series complies with CF77.UL.05.12.D - tested by IPA according to standard DIN EN ISO 14644-1
CE	Following 2014/35/EC
UKCA	In accordance with the valid regulations of the United Kingdom (as at 08/2021)

Guaranteed service life (details ▶ Page 188)

Cycles*	5 million	7.5 million	10 million
Temperature, from/to [°C]	Torsion max. [°/m]	Torsion max. [°/m]	Torsion max. [°/m]
-25/-15	±150	±90	±30
-15/+70	±180	±120	±60
+70/+80	±150	±90	±30

* Higher number of double strokes? Service life calculation online ▶ www.igus.eu/chainflexlife

Typical application areas

- For heaviest duty applications with torsion movements, Class 6
- Especially for robots and 3D movements, Class 1
- Almost unlimited resistance to oil, Class 3
- Torsion ±180°, with 1m cable length, Class 3
- Indoor and outdoor applications, UV resistant
- Robots, handling, spindle drives

Guarantee igus chainflex 36 up to 36 months guarantee

igus 36-month chainflex cable guarantee and service life calculator based on 2 billion test cycles per year

UL-verified chainflex® guarantee promise ▶ www.igus.eu/ul-verified

chainflex® CFROBOT7

Motor cable | PUR

Class 6.1.3.3

Load	low 1 2 3 4 5 **6** 7	highest
Travel	unsupported **1** 2 3 4 5 6	≥ 400 m
Oil resistance	none 1 2 **3** 4	highest
Torsion	none 1 2 **3** 4	±360°

Example image

Part No.	Number of cores and conductor nominal cross section [mm²]	Outer diameter (d) max. [mm]	Copper index [kg/km]	Weight [kg/km]
2 control pairs				
CFROBOT7.07.03.02.02.C	(4G0.75+2x(2x0.34)C)C	11.5	88	155
CFROBOT7.15.15.02.02.C	(4G1.5+2x(2x1.5)C)C	16.5	197	304
CFROBOT7.25.15.02.02.C	(4G2.5+2x(2x1.5)C)C	16.5	243	349
4 control pairs				
CFROBOT7.40.02.02.04.C	(4G4.0+4x(2x0.25)C)C	17.0	253	366
without control pair				
CFROBOT7.15.03.C	(3G1.5)C	8.5	61	98
CFROBOT7.15.04.C	(4G1.5)C	9.5	77	120
CFROBOT7.25.03.C	(3G2.5)C	10.0	93	142
CFROBOT7.25.04.C	(4G2.5)C	11.0	119	173
CFROBOT7.60.04.C	(4G6.0)C	15.0	278	374

Note: the given outer diameters are maximum values and may tend toward lower tolerance limits.
G = with green-yellow earth core **x =** without earth core

Order example: CFROBOT7.15.03.C **– to your desired length (0.5m steps)**
CFROBOT7 **chainflex® series** .15 **Code nominal cross section** .03 **Code number of cores**

Online order ▶ www.igus.eu/CFROBOT7

Delivery time 24hrs or today.
Delivery time means time until goods are shipped.

Cables available in the chainflex® CASE
Simple savings on delivery, storage space and re-ordering with the chainflex® CASE - ship'n store by igus®.
More information ▶ www.igus.eu/cf-case

Guarantee igus chainflex 36 up to 36 months guarantee

igus 36-month chainflex cable guarantee and service life calculator based on 2 billion test cycles per year

chainflex® CFROBOT

Spindle cable/single core | TPE

10,000,000 Cycles guaranteed

10 x d Bend radius e-chain®

±180°/m Torsion angle

- For torsion applications
- TPE outer jacket
- Shielded
- Oil and bio-oil-resistant
- PVC-free
- UV-resistant
- Flame-retardant
- Hydrolysis and microbe-resistant

Dynamic information

Bend radius	**flexible twisted**	minimum 10 x d
	fixed	minimum 5 x d
Temperature	**flexible twisted**	-35°C up to +90°C
	fixed	-50°C up to +100°C (following DIN EN 50305)
v max.	**twisted**	180°/s
a max.	**twisted**	60°/s²
Travel	Robots and 3D movements, Class 1	
Torsion	Torsion ±180°, with 1m cable length, Class 3	

Cable structure

Conductor	Extremely bend-resistant cable.
Core insulation	Mechanically high-quality TPE mixture.
Overall shield	Extremely torsion-resistant tinned braided copper shield. Coverage approx. 90% optical
Outer jacket	Low-adhesion, extremely abrasion-resistant and highly flexible TPE mixture, adapted to suit the requirements in e-chains®. Colour: jet black (similar to RAL 9005)

Electrical information

Nominal voltage	600/1000V (following DIN VDE 0298-3) 1,000V (following UL)
Testing voltage	4000V (following DIN EN 50395)

Properties and approvals

UV resistance	High
Oil resistance	Oil-resistant (following DIN EN 60811-404), bio-oil-resistant (following VDMA 24568 with Plantocut 8 S-MB tested by DEA), Class 4
Flame-retardant	According to IEC 60332-1-2, Cable Flame, VW-1, FT1, FT2 / Horizontal Flame
Silicone-free	Free from silicone which can affect paint adhesion (following PV 3.10.7 - status 1992)
UL Verified	Certificate no. B129699: "igus 36-month chainflex cable guarantee and service life calculator based on 2 billion test cycles per year"

Example image

EPLAN download, configurators ▶ www.igus.eu/CFROBOT

Class 6.1.4.3

Load	low	1 2 3 4 5 **6** 7 highest
Travel	unsupported	**1** 2 3 4 5 6 ≥ 400 m
Oil resistance	none	1 2 3 **4** highest
Torsion	none	1 2 **3** 4 ±360°

UL/CSA AWM	See data sheet for details ▶ www.igus.eu/CFROBOT
NFPA	Following NFPA 79-2018, chapter 12.9
EAC	Certificate no. RU C-DE.ME77.B.00863/20
REACH	In accordance with Regulation (EC) No. 1907/2006 (REACH)
Lead-free	Following 2011/65/EC (RoHS-II/RoHS-III)
Cleanroom	According to ISO Class 1. The outer jacket material of this series complies with CF34.UL.25.04.D - tested by IPA according to standard DIN EN ISO 14644-1
CE	Following 2014/35/EC
UKCA	In accordance with the valid regulations of the United Kingdom (as at 08/2021)

Guaranteed service life (details ▶ Page 188)

Cycles*	5 million	7.5 million	10 million
Temperature, from/to [°C]	Torsion max. [°/m]	Torsion max. [°/m]	Torsion max. [°/m]
-35/-25	±150	±90	±30
-25/+70	±180	±120	±60
+70/+80	±150	±90	±30

* Higher number of double strokes? Service life calculation online ▶ www.igus.eu/chainflexlife

Typical application areas

- For heaviest duty applications with torsion movements, Class 6
- Especially for robots and 3D movements, Class 1
- Almost unlimited resistance to oil, also with bio-oils, Class 4
- Torsion ±180°, with 1m cable length, Class 3
- Indoor and outdoor applications, UV resistant
- Robots, handling, spindle drives

Part No.	Number of cores and conductor nominal cross section [mm²]	Outer diameter (d) max. [mm]	Copper index [kg/km]	Weight [kg/km]
CFROBOT.035	(1x10)C	10.5	125	194
CFROBOT.036	(1x16)C	12.0	189	269
CFROBOT.037	(1x25)C	14.5	298	392
CFROBOT.038	(1x35)C	15.5	403	528

Note: the given outer diameters are maximum values and may tend toward lower tolerance limits.
G = with green-yellow earth core **x =** without earth core

Cables available in the chainflex® CASE

Simple savings on delivery, storage space and re-ordering with the chainflex® CASE - ship'n store by igus®.
More information ▶ www.igus.eu/cf-case

UL-verified chainflex® guarantee promise ▶ www.igus.eu/ul-verified

chainflex® CFROBOT8

Bus cable | PUR

Example image

10,000,000 Cycles guaranteed

10 x d Bend radius e-chain®

±180°/m Torsion angle

- For torsion applications
- PUR outer jacket
- Shielded
- Oil-resistant and coolant-resistant
- Flame-retardant
- Notch-resistant
- Hydrolysis and microbe-resistant

Dynamic information

Bend radius	flexible twisted	minimum 10 x d
	fixed	minimum 5 x d
Temperature	flexible twisted	-25°C up to +70°C
	fixed	-50°C up to +70°C (following DIN EN 50305)
v max.	twisted	180°/s
a max.	twisted	60°/s²
Travel	Robots and 3D movements, Class 1	
Torsion	Torsion ±180°, with 1m cable length, Class 3	

Cable structure

Conductor	Stranded conductor in especially bending-resistant version consisting of tinned or bare copper wires (following DIN EN 60228).
Core insulation	According to bus specification.
Core structure	According to bus specification.
Core identification	According to bus specification. ▶ **Product range table**
Intermediate layer	Foil taping over the external layer.
Overall shield	Torsion-resistant tinned braided copper shield. Coverage approx. 80% optical
Outer jacket	Low-adhesion, halogen-free, highly abrasion-resistant PUR mixture, adapted to suit the requirements in e-chains® (following DIN EN 50363-10-2) Colour: Steel blue (similar to RAL 5011)

Electrical information

Nominal voltage	50V 300V (following UL)
Testing voltage	500V

EPLAN download, configurators ▶ www.igus.eu/CFROBOT8

Class 6.1.3.3

Load	low	1 2 3 4 5 **6** 7 highest
Travel	unsupported	**1** 2 3 4 5 6 ≥ 400 m
Oil resistance	none	1 2 **3** 4 highest
Torsion	none	1 2 **3** 4 ±360°

Properties and approvals

UV resistance	High
Oil resistance	Oil-resistant (following DIN EN 50363-10-2), Class 3
Flame-retardant	According to IEC 60332-1-2, Cable Flame, VW-1, FT1, FT2 / Horizontal Flame
Silicone-free	Free from silicone which can affect paint adhesion (following PV 3.10.7 - status 1992)
UL Verified	Certificate no. B129699: "igus 36-month chainflex cable guarantee and service life calculator based on 2 billion test cycles per year"
UL/CSA AWM	See data sheet for details ▶ www.igus.eu/CFROBOT8
EAC	Certificate No. RU C-DE.ME77.B.00295/19
REACH	In accordance with Regulation (EC) No. 1907/2006 (REACH)
Lead-free	Following 2011/65/EC (RoHS-II/RoHS-III)
Cleanroom	According to ISO Class 1. The outer jacket material of this series complies with CF77.UL.05.12.D - tested by IPA according to standard DIN EN ISO 14644-1
CE	Following 2014/35/EC
UKCA	In accordance with the valid regulations of the United Kingdom (as at 08/2021)

Guaranteed service life (details ▶ Page 188)

Cycles*	5 million	7.5 million	10 million
Temperature, from/to [°C]	Torsion max. [°/m]	Torsion max. [°/m]	Torsion max. [°/m]
-25/-15	±150	±90	±30
-15/+60	±180	±120	±60
+60/+70	±150	±90	±30

* Higher number of double strokes? Service life calculation online ▶ www.igus.eu/chainflexlife

Typical application areas

- For heaviest duty applications with torsion movements, Class 6
- Especially for robots and 3D movements, Class 1
- Almost unlimited resistance to oil, Class 3
- Torsion ±180°, with 1m cable length, Class 3
- Indoor and outdoor applications, UV resistant
- Robots, handling, spindle drives

UL-verified chainflex® guarantee promise ▶ www.igus.eu/ul-verified

chainflex® CFROBOT8

Bus cable | PUR

Class 6.1.3.3

Load	low 1 2 3 4 5 **6** 7	highest
Travel	unsupported **1** 2 3 4 5 6	≥ 400 m
Oil resistance	none 1 2 **3** 4	highest
Torsion	none 1 2 **3** 4	±360°

Example image

Part No.	Number of cores and conductor nominal cross section [mm²]	Outer diameter (d) max. [mm]	Copper index [kg/km]	Weight [kg/km]	Part No.	Characteristic wave impedance approx. [Ω]	Core group	Colour code
Profibus (1x2x0.64mm)								
CFROBOT8.001	(2x0.35)C	8.0	28	63	**CFROBOT8.001**	150	(2x0.35)C	red, green
CAN-Bus								
CFROBOT8.022	(4x0.5)C	7.5	41	78	**CFROBOT8.022**	120	(4x0.5)C	white, green, brown, yellow (star-quad stranding)
DeviceNet								
CFROBOT8.030	(2xAWG24)C+(2xAWG22)C	9.5	31	77	**CFROBOT8.030**	120	(2xAWG24)C	white/blue
							(2xAWG22)C	red/black
Ethernet/CAT5/PoE								
CFROBOT8.045	4x(2x0.15)C	9.5	48	96	**CFROBOT8.045**	100	4x(2x0.15)C	white-green/green, white-orange/orange, white-blue/blue, white-brown/brown
Ethernet/CAT6/PoE								
CFROBOT8.049	4x(2x0.15)C	9.5	48	96	**CFROBOT8.049**	100	4x(2x0.15)C	white-green/green, white-orange/orange, white-blue/blue, white-brown/brown
Ethernet/CAT6A								
CFROBOT8.050	4x(2x0.15)C	10.5	51	134	**CFROBOT8.050**	100	4x(2x0.15)C	white-green/green, white-orange/orange, white-blue/blue, white-brown/brown
Ethernet/CAT7								
CFROBOT8.052	4x(2x0.15)C	10.5	51	134	**CFROBOT8.052**	100	4x(2x0.15)C	white-green/green, white-orange/orange, white-blue/blue, white-brown/brown
Profinet								
CFROBOT8.060	(2x(2x0.34))C	8.5	34	74	**CFROBOT8.060**	100	(2x(2x0.34))C	white/blue, yellow/orange

Note: the given outer diameters are maximum values and may tend toward lower tolerance limits.
G = with green-yellow earth core **x =** without earth core

Cables available in the chainflex® CASE

Simple savings on delivery, storage space and re-ordering with the chainflex® CASE - ship'n store by igus®.
More information ▶ www.igus.eu/cf-case

Technical note on bus cables
chainflex® bus cables have been specially developed and tested for continuously moving use in e-chains®. Depending on the material used for the outer jacket and on the underlying construction principle, the bus cables are designed for different mechanical requirements and resistance to diverse media.
The cables have been electrically designed in such a way that, on the one hand, the electrical requirements of the respective bus specification are reliably met and, on the other, that greater value is placed on a high degree of EMC reliability.
It is also ensured that the electrical values remain stable over the long term in spite of permanent movement.
The overall quality of transmission in a complete bus communication system, however, is not solely dependent on the cable used. What is also essential is that all components (electronic parts, connecting system and cable) are precisely matched to each other and that the maximum transmission lengths, which are dependent on the respective system, are adhered to with regard to the data transmission rates needed. A cable is thus not solely responsible for the reliable transmission of signals.
igus® advises you when you are designing your bus system to take all these factors into account and, with extensive tests, helps you to ensure the process reliability of your system from the very beginning.

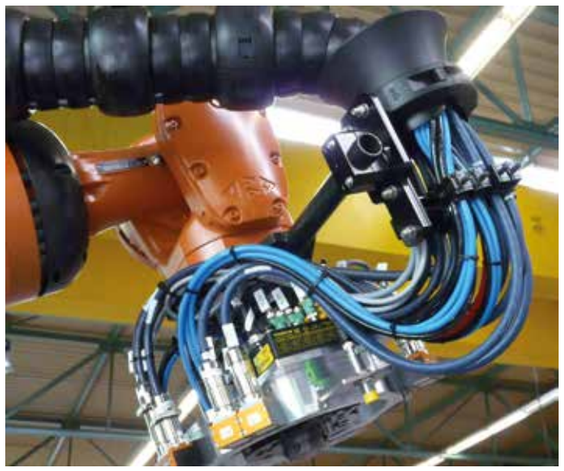

CFROBOT® cables used in robots for the automated systems in fuel tank production. These are supplied as fully harnessed readychain® systems.

Guarantee igus chainflex 36 up to 36 months guarantee

igus 36-month chainflex cable guarantee and service life calculator based on 2 billion test cycles per year

chainflex® CFROBOT8.PLUS

Bus cable | PUR

Example image

10,000,000 Cycles guaranteed

10 x d Bend radius e-chain®

±360°/m Torsion angle

- For torsion applications
- PUR outer jacket
- Shielded
- Oil-resistant and coolant-resistant
- Flame-retardant
- PVC and halogen-free
- Notch-resistant
- Hydrolysis and microbe-resistant

Dynamic information

Bend radius	flexible twisted	minimum 10 x d
	fixed	minimum 5 x d
Temperature	flexible twisted	-25°C up to +70°C
	fixed	-50°C up to +70°C (following DIN EN 50305)
v max.	twisted	360°/s
a max.	twisted	60°/s²
Travel	Robots and 3D movements, Class 1	
Torsion	Torsion ±360°, with 1m cable length, Class 4	

Cable structure

Conductor	Stranded conductor in especially bending-resistant version consisting of bare copper wires (following DIN EN 60228).
Core insulation	According to bus specification.
Core structure	According to bus specification.
Core identification	According to bus specification. ▶ **Product range table**
Intermediate layer	Foil taping over the external layer.
Overall shield	Torsion-resistant tinned braided copper shield. Coverage approx. 80% optical
Outer jacket	Low-adhesion, halogen-free, highly abrasion-resistant PUR mixture, adapted to suit the requirements in e-chains® (following DIN EN 50363-10-2) Colour: Steel blue (similar to RAL 5011)

Electrical information

Nominal voltage	50V 30V (following UL)
Testing voltage	500V

Class 6.1.3.4

Load	low 1 2 3 4 5 **6** 7 highest	
Travel	unsupported **1** 2 3 4 5 6 ≥ 400 m	
Oil resistance	none 1 2 **3** 4 highest	
Torsion	none 1 2 3 **4** ±360°	

Properties and approvals

UV resistance	High
Oil resistance	Oil-resistant (following DIN EN 50363-10-2), Class 3
Flame-retardant	According to IEC 60332-1-2, Cable Flame, VW-1, FT1, FT2 / Horizontal Flame
Silicone-free	Free from silicone which can affect paint adhesion (following PV 3.10.7 - status 1992)
Halogen-free	Following DIN EN 60754
UL Verified	Certificate no. B129699: "igus 36-month chainflex cable guarantee and service life calculator based on 2 billion test cycles per year"
UL/CSA AWM	See data sheet for details ▶ www.igus.eu/CFROBOT8.PLUS
EAC	Certificate No. RU C-DE.ME77.B.00295/19
REACH	In accordance with Regulation (EC) No. 1907/2006 (REACH)
Lead-free	Following 2011/65/EC (RoHS-II/RoHS-III)
Cleanroom	According to ISO Class 1. The outer jacket material of this series complies with CF77.UL.05.12.D - tested by IPA according to standard DIN EN ISO 14644-1
CE	Following 2014/35/EC
UKCA	In accordance with the valid regulations of the United Kingdom (as at 08/2021)

Guaranteed service life (details ▶ Page 188)

Cycles*	5 million	7.5 million	10 million
Temperature, from/to [°C]	Torsion max. [°/m]	Torsion max. [°/m]	Torsion max. [°/m]
-25/-15	±330	±240	±150
-15/+60	±360	±270	±180
+60/+70	±330	±240	±150

* Higher number of double strokes? Service life calculation online ▶ www.igus.eu/chainflexlife

Typical application areas

- For heaviest duty applications with torsion movements, Class 6
- Especially for robots and 3D movements, Class 1
- Almost unlimited resistance to oil, Class 3
- Torsion ±360°, with 1m cable length, Class 4
- Indoor and outdoor applications, UV resistant
- Robots, handling, spindle drives

Guarantee igus chainflex 36 up to 36 months guarantee

igus 36-month chainflex cable guarantee and service life calculator based on 2 billion test cycles per year

CFROBOT8.PLUS

Bus cable | PUR

Class 6.1.3.4

Load	low 1 2 3 4 5 **6** 7 highest	
Travel	unsupported **1** 2 3 4 5 6 ≥ 400 m	
Oil resistance	none 1 2 **3** 4 highest	
Torsion	none 1 2 3 **4** ±360°	

Example image

Part No.	Number of cores and conductor nominal cross section [mm²]	Outer diameter (d) max. [mm]	Copper index [kg/km]	Weight [kg/km]	Part No.	Characteristic wave impedance approx. [Ω]	Core group	Colour code
Profibus (1x2x0.64mm)								
CFROBOT8.PLUS.001	(2x0.25)C	9.0	30	80	**CFROBOT8.PLUS.001**	150	(2x0.25)C	red, green
CAN-Bus								
CFROBOT8.PLUS.022	(2x0.25)C	9.0	47	103	**CFROBOT8.PLUS.022**	120	(4x0.5)C	white, green, brown, yellow (star-quad stranding)
Ethernet/CAT5e/PoE								
CFROBOT8.PLUS.045	(4x(2x0.15))C	7.5	32	67	**CFROBOT8.PLUS.045**	100	(4x(2x0.15))C	white-blue/blue, white-orange/orange, white-green/green, white-brown/brown
Ethernet/CAT6/PoE								
CFROBOT8.PLUS.049	(4x(2x0.15))C	7.5	32	67	**CFROBOT8.PLUS.049**	100	(4x(2x0.15))C	white-blue/blue, white-orange/orange, white-green/green, white-brown/brown
Ethernet/CAT6A								
CFROBOT8.PLUS.050	4x(2x0.15)C	10.5	49	115	**CFROBOT8.PLUS.050**	100	4x(2x0.15)C	white-blue/blue, white-orange/orange, white-green/green, white-brown/brown
Ethernet/CAT7								
CFROBOT8.PLUS.052	4x(2x0.15)C	10.5	49	115	**CFROBOT8.PLUS.052**	100	4x(2x0.15)C	white-blue/blue, white-orange/orange, white-green/green, white-brown/brown
Profinet								
CFROBOT8.PLUS.060 [2]	(4x0.34)C	7.0	32	64	**CFROBOT8.PLUS.060** [2]	100	(4x0.34)C	white, orange, blue, yellow (Star-quad)

The chainflex® types marked with [2] are cables designed as a star-quad.

Note: the given outer diameters are maximum values and may tend toward lower tolerance limits.
G = with green-yellow earth core **x =** without earth core

Cables available in the chainflex® CASE

Simple savings on delivery, storage space and re-ordering with the chainflex® CASE - ship'n store by igus®.
More information ▶ www.igus.eu/cf-case

Order example: CFROBOT8.PLUS.060 **- to your desired length (0.5m steps)**
CFROBOT8.PLUS **chainflex® series** .060 **Code bus type**

Online order ▶ www.igus.eu/CFROBOT8.PLUS

Delivery time 24hrs or today.
Delivery time means time until goods are shipped.

Technical note on bus cables
chainflex® bus cables have been specially developed and tested for continuously moving use in e-chains®. Depending on the material used for the outer jacket and on the underlying construction principle, the bus cables are designed for different mechanical requirements and resistance to diverse media.
The cables have been electrically designed in such a way that, on the one hand, the electrical requirements of the respective bus specification are reliably met and, on the other, that greater value is placed on a high degree of EMC reliability.
It is also ensured that the electrical values remain stable over the long term in spite of permanent movement.
The overall quality of transmission in a complete bus communication system, however, is not solely dependent on the cable used. What is also essential is that all components (electronic parts, connecting system and cable) are precisely matched to each other and that the maximum transmission lengths, which are dependent on the respective system, are adhered to with regard to the data transmission rates needed. A cable is thus not solely responsible for the reliable transmission of signals.
igus® advises you when you are designing your bus system to take all these factors into account and, with extensive tests, helps you to ensure the process reliability of your system from the very beginning.

chainflex® CFROBOT9

Hybrid cables | PUR

Example image

10,000,000 Cycles guaranteed

10 x d Bend radius e-chain®

±180°/m Torsion angle

- For torsion applications
- PUR outer jacket
- Unshielded/shielded
- Oil-resistant and coolant-resistant
- Flame-retardant
- PVC and halogen-free
- Notch-resistant
- Hydrolysis and microbe-resistant

Dynamic information

Bend radius	e-chain® twisted	minimum 10 x d
	flexible	minimum 8 x d
	fixed	minimum 5 x d
Temperature	e-chain® twisted	-25°C to +80°C
	flexible	-40°C up to +80°C (following DIN EN 60811-504)
	fixed	-50°C up to +80°C (following DIN EN 50305)
v max.	twisted	180°/s
a max.	twisted	60°/s²
Travel	Robots and 3D movements, Class 1	
Torsion	Torsion ±180°, with 1m cable length, Class 3	

Cable structure

Conductor	Stranded conductor in especially bending-resistant version consisting of bare copper wires (following DIN EN 60228).
Core insulation	Mechanically high-quality TPE mixture.
Core identification	▶ Product range table
Element shield	Extremely torsion-resistant tinned braided copper shield. Coverage approx. 85% optical
Outer jacket	Low-adhesion, halogen-free, highly abrasion-resistant PUR mixture, adapted to suit the requirements in e-chains® (following DIN EN 50363-10-2) Colour: Steel blue (similar to RAL 5011)

Electrical information

Nominal voltage	300/500V (following DIN VDE 0298-3) 300V (following UL)
Testing voltage	2,000V (following DIN EN 50395)

EPLAN download, configurators ▶ www.igus.eu/CFROBOT9

Class 6.1.3.3

Load	low 1 2 3 4 5 **6** 7	highest
Travel	unsupported **1** 2 3 4 5 6	≥ 400 m
Oil resistance	none 1 2 **3** 4	highest
Torsion	none 1 2 **3** 4	±360°

Properties and approvals

UV resistance	High
Oil resistance	Oil-resistant (following DIN EN 50363-10-2), Class 3
Flame-retardant	According to IEC 60332-1-2, Cable Flame, VW-1, FT1, FT2 / Horizontal Flame
Silicone-free	Free from silicone which can affect paint adhesion (following PV 3.10.7 - status 1992)
Halogen-free	Following DIN EN 60754
UL Verified	Certificate no. B129699: "igus 36-month chainflex cable guarantee and service life calculator based on 2 billion test cycles per year"
UL/CSA AWM	See data sheet for details ▶ www.igus.eu/CFROBOT9
NFPA	Following NFPA 79-2018, chapter 12.9
EAC	Certificate No. RU C-DE.ME77.B.00300/19
REACH	In accordance with Regulation (EC) No. 1907/2006 (REACH)
Lead-free	Following 2011/65/EC (RoHS-II/RoHS-III)
Cleanroom	According to ISO Class 1. The outer jacket material of this series complies with CF77.UL.05.12.D - tested by IPA according to standard DIN EN ISO 14644-1
CE	Following 2014/35/EC
UKCA	In accordance with the valid regulations of the United Kingdom (as at 08/2021)

Guaranteed service life (details ▶ Page 188)

Cycles*	5 million	7.5 million	10 million
Temperature, from/to [°C]	Torsion max. [°/m]	Torsion max. [°/m]	Torsion max. [°/m]
-25/-15	±150	±90	±30
-15/+70	±180	±120	±60
+70/+80	±150	±90	±30

* Higher number of double strokes? Service life calculation online ▶ www.igus.eu/chainflexlife

Typical application areas

- For heaviest duty applications with torsion movements, Class 6
- Especially for robots and 3D movements, Class 1
- Almost unlimited resistance to oil, Class 3
- Torsion ±180°, with 1m cable length, Class 3
- Indoor and outdoor applications, UV resistant
- Robots, handling, spindle drives

Guarantee igus chainflex 36 up to 36 months guarantee

igus 36-month chainflex cable guarantee and service life calculator based on 2 billion test cycles per year

UL-verified chainflex® guarantee promise ▶ www.igus.eu/ul-verified

chainflex® CFROBOT9

Hybrid cables | PUR

Class 6.1.3.3

Load	low	1	2	3	4	5	6	7	highest
Travel	unsupported	1	2	3	4	5	6		≥ 400 m
Oil resistance	none	1	2	3	4				highest
Torsion	none	1	2	3	4				±360°

Example image

Part No.	Number of cores and conductor nominal cross section [mm²]	Outer diameter (d) max. [mm]	Copper index [kg/km]	Weight [kg/km]	Part No.	Core group	Colour code
CFROBOT9.001 [11]	5G1.0+(2x1.0)C	10.0	82	136	**CFROBOT9.001** [11]	5G1.0	white with black numerals 1-4, one green-yellow core
						(2x1.0)C	white with black numerals 5-6
CFROBOT9.006 [11]	24G1.0+(2x1.0)C	19.0	280	453	**CFROBOT9.006** [11]	24G1.0	white with black numbers 1-4, 7-25 one green-yellow core
						(2x1.0)C	white with black numerals 5-6
CFROBOT9.007	(15x(2x0.25)C+(4x0.25)C)C	18.5	229	369	**CFROBOT9.007**	15x(2x0.25)C	Colour code in accordance with DIN 47100
						(4x0.25)C	white/green/brown/yellow (CAN-Bus)
CFROBOT9.010	(4x(2x0.25)C)C	10.5	63	116	**CFROBOT9.010**	4x(2x0.25)C	white/brown, green/yellow, grey/pink, blue/red

[11] Phase-out model

Note: the given outer diameters are maximum values and may tend toward lower tolerance limits.
G = with green-yellow earth core **x =** without earth core

Cables available in the chainflex® CASE

Simple savings on delivery, storage space and re-ordering with the chainflex® CASE - ship'n store by igus®.
More information ▶ www.igus.eu/cf-case

igus® chainflex® cables in a triflex® R multi-dimensionally moving energy supply system for 6-axis robots

igus® cables for robots

Harnessed dress packs and cables for robots

Guarantee igus chainflex 36 up to 36 months guarantee

igus 36-month chainflex cable guarantee and service life calculator based on 2 billion test cycles per year

Selection table

chainflex® readychain® and readycable®

	Cable type		Page
Dress packs for robots			
	readychain® Robot	Harnessed dress packs for welding robots	226
Harnessed cables for robots			
	readycable® KUKA	Harnessed cables for KUKA robots	228
	readycable® Fanuc	Harnessed cables for Fanuc robots	234
	readycable® ABB	Harnessed cables for ABB robots	238
Direct connection cables for robots			
	readycable® KUKA	Direct connection cables for KUKA robots	229
	readycable® Fanuc	Direct connection cables for Fanuc robots	235
	readycable® ABB	Direct connection cables for ABB robots	239
Cables according to AIDA specifications			
	readycable® AIDA	Harnessed cables according to AIDA specifications	244 New

Harnessed standard dress packs for welding robots. The packages consist of a triflex® R e-chain®, filled with chainflex® cables and hoses for the supply of energy, data and media. Users have the option of having the cables harnessed with connectors suitable for 24 manufacturer standards. The dress packs allow a quick replacement of the energy supply.

readychain® Robot

Ready-to-install harnessed e-chain systems® for robots

**Harnessed energy supply systems, connectors and cables from igus®.
Everything from one source. Directly from the manufacturer.**

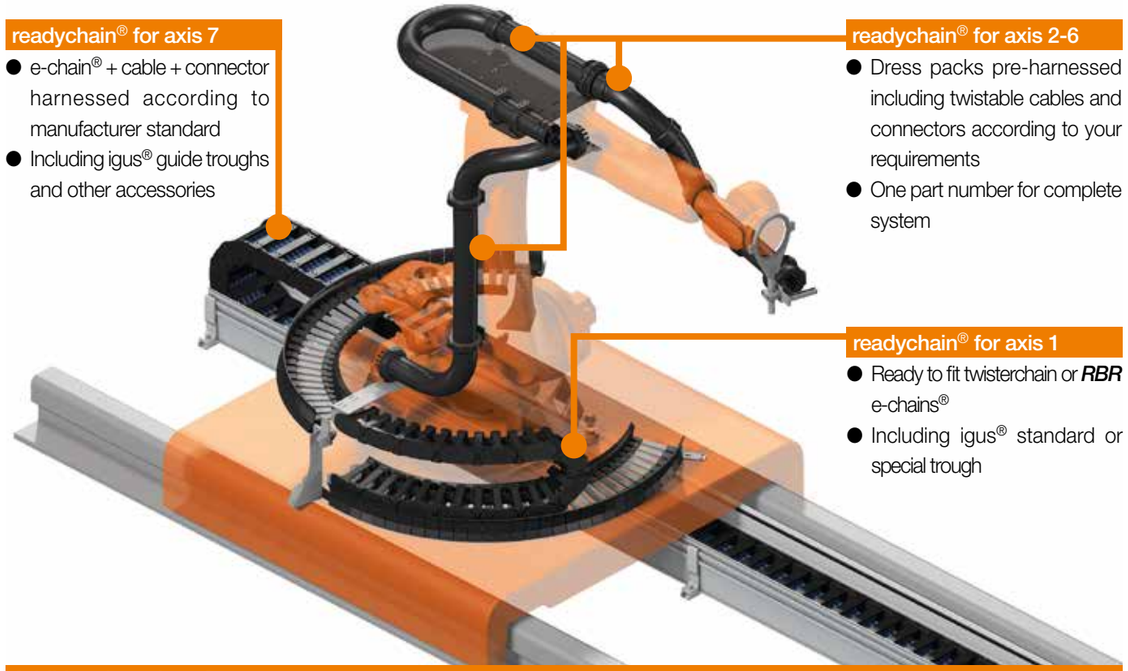

readychain® for axis 7

- e-chain® + cable + connector harnessed according to manufacturer standard
- Including igus® guide troughs and other accessories

readychain® for axis 2-6

- Dress packs pre-harnessed including twistable cables and connectors according to your requirements
- One part number for complete system

readychain® for axis 1

- Ready to fit twisterchain or ***RBR*** e-chains®
- Including igus® standard or special trough

Additional services for you

- Survey of existing systems on your robot by our sales engineers
- Optional system guarantee
- Worldwide readychain® specialists and 11 production sites for fast maintenance and spare part support

Energy supply for robots made easy online: around 1.5 million configuration options for energy supply components on a robot

The QuickRobot robot equipment configurator from igus® contains around 1.5 million configuration options for around 500 robot models. Find the right parts in seconds by entering just the robot manufacturer and model. The required e-chain® size can be selected by diameter. The required e-chain® size can be selected by diameter.

More information ▶ www.igus.eu/quickrobot

All igus® robotic components are tested in our laboratory and have already been used reliably in many applications for many years. Our goal is to ensure that the whole energy supply on your robots is reliable. We do not simply focus on mechanical protection but instead look at the entire application including the cables that have also been especially developed for use on the robot. We will gladly find a solution for your application and look forward to receiving your enquiry.

We are always happy to visit you on site and show you the advantages of the modular igus® robot equipment kit.

Matthias Meyer
Head of Business Unit ECS
triflex® & Robotics
Phone +49-2203 9649-161
mmeyer@igus.net

QuickRobot example configuration
▶ **Page 16**

Product range

triflex® readychain® dress packs for welding robots

Product range dress packs for welding robots	
Product range **Part No.**	Dress pack
Welding axis 1-3 (1 m projection/side + 1 m e-chain® for each)	
RRC.S.001	Consisting of: - 1m TRLF.85.135.0, including mounting brackets - Welding cable (2x35mm² + 1x25mm²) including multicontact TSB and TSS welding connector - Control cable (18x0.75mm² + 5x0.75mm²) including rectangular connector on both ends - Welding control cable (5x2x0.5mm²) including rectangular connector on both ends - 3x hoses - DN12 red, green, blue - including fixture at both ends
Welding axis 3-6 (1 m projection/side + 1 m e-chain® for each)	
RRC.S.002	Consisting of: - 1m TRC.85.135.0 including protectors and mounting brackets - Welding cable (2x35mm² + 1x25mm²) including multicontact TSB and TSS welding connector - Control cable (18x0.75mm² + 5x0.75mm²) including round connector and rectangular connector - Welding control cable (5x2x0.5mm²) including rectangular connector on both ends - 3x hoses - DN12 red, green, blue - including fixture at both ends

readycable® Robot

Harnessed cables - KUKA Quantec

Harnessed cables for KUKA Quantec, to your required length

Part No.	chainflex® cable	Manufacturer description	Number of cores and conductor nominal cross section [mm²]	Ø [mm]
Motor cable (straight socket)				
MAT904105003	**CFSPECIAL.792.011**	X30/X30.1	(5x(2x6.0+2x2.5)+2x(6x1.0)C)C	35.5
Motor cable (angled socket)				
MAT904105004	**CFSPECIAL.792.011**	X30/X30.1	(5x(2x6.0+2x2.5)+2x(6x1.0)C)C	35.5
Data cable				
MAT904105005	**CFBUS.PUR.H01.060**	X31/X31.1	((4x0.38)C+4x1.5)C	11.5
Motor cable single axis 7 (axis 7)				
MAT904105006	**CF270.UL.25.15.02.01.D**	XM.../X...	(4G2.5+(2x1.5)C)C	14.0
MAT904105007	**CF270.UL.40.15.02.01.D**	XM.../X...	(4G4.0+(2x1.5)C)C	15.0
Motor cable single axis (axis 7)				
MAT904105008	**CF270.UL.60.15.02.01.D**	XM.../X...	(4G6.0+(2x1.5)C)C	16.5
Control cable (axis 7)				
MAT904105009	**CF112.02.04.02**	Control cable single axis	(4x(2x0.25)C)C	11.0
Earth-core				
MAT904105010	**CFPE.160.01**	Connector plate/robot	1G16	9.5

Note: the given outer diameters are maximum values and may tend toward lower tolerance limits.
G = with green-yellow earth core **x =** without earth core
igus® GmbH defines cable length as entire length inlcuding connectors or open harnessing.

readycable® Robot

Direct connection cable - KUKA Quantec

Direct connection cables for KUKA Quantec, to your required length

Part No.	chainflex® cable	Number of cores and conductor nominal cross section [mm²]	Ø [mm]
Motor cable (direct connection cable)			
MAT904141225	**CFSPECIAL.792.011**	(5x(2x6.0+2x2.5)+2x(6x1.0)C)C	35.5
Motor cable (direct connection cable)			
MAT904141226	**CFSPECIAL.792.011**	(5x(2x6.0+2x2.5)+2x(6x1.0)C)C	35.5
Signal cable (direct connection cable)			
MAT904141227	**CFBUS.PUR.H01.060**	((4x0.38)C+4x1.5)C	11.5

Note: the given outer diameters are maximum values and may tend toward lower tolerance limits.
G = with green-yellow earth core **x =** without earth core
igus® GmbH defines cable length as entire length inlcuding connectors or open harnessing.

readycable® Robot

Harnessed cables - KUKA Fortec

Harnessed cables for KUKA Fortec, to your required length

Part No.	chainflex® cable	Manufacturer description	Number of cores and conductor nominal cross section [mm²]	Ø [mm]
Motor cable (angled socket)				
MAT904105011	CFSPECIAL.792.014	X30.1/X30.1.1	(2x(3x1.5)C+3x(3x10)+1G10)C	35.5
MAT904105012	CFSPECIAL.792.013	X30.4/X30.4.1	((6x1.5)C+3x(3x4)+1G6)C	28.0
Data cable				
MAT904105005	CFBUS.PUR.H01.060	X31/X31.1	((4x0.38)C+4x1.5)C	11.5
Motor cable single axis (axis 7)				
MAT904105006	CF270.UL.25.15.02.01.D	XM.../X...	(4G2.5+(2x1.5)C)C	14.0
MAT904105007	CF270.UL.40.15.02.01.D	XM.../X...	(4G4.0+(2x1.5)C)C	15.0
Motor cable single axis (axis 7)				
MAT904105008	CF270.UL.60.15.02.01.D	XM.../X...	(4G6.0+(2x1.5)C)C	16.5
Control cable (axis 7)				
MAT904105013	CF112.02.04.02	Control cable single axis	(4x(2x0.25)C)C	11.0
Earth-core				
MAT904105010	CFPE.160.01	Connector plate/robot	1G16	9.5

Note: the given outer diameters are maximum values and may tend toward lower tolerance limits.
G = with green-yellow earth core **x =** without earth core
igus® GmbH defines cable length as entire length inlcuding connectors or open harnessing.

readycable® Robot

Direct connection cable - KUKA Fortec

Direct connection cables for KUKA Fortec, to your required length

Part No.	chainflex® cable	Number of cores and conductor nominal cross section [mm²]	Ø [mm]
Motor cable (direct connection cable)			
MAT904141228	CFSPECIAL.792.014	(2x(3x1.5)C+3x(3x10)+1G10)C	35.5
MAT904141229	CFSPECIAL.792.013	((6x1.5)C+3x(3x4)+1G6)C	28.0
Signal cable (direct connection cable)			
MAT904141227	CFBUS.PUR.H01.060	((4x0.38)C+4x1.5)C	11.5

Note: the given outer diameters are maximum values and may tend toward lower tolerance limits.
G = with green-yellow earth core **x =** without earth core
igus® GmbH defines cable length as entire length inlcuding connectors or open harnessing.

readycable® Robot

Harnessed cables - KUKA Titan

Harnessed cables for KUKA Titan, to your required length

Part No.	chainflex® cable	Manufacturer description	Number of cores and conductor nominal cross section [mm²]	Ø [mm]
Motor cable (angled socket)				
MAT904105011	CFSPECIAL.792.014	X30.1/X30.1.1	(2x(3x1.5)C+3x(3x10)+1G10)C	35.5
MAT904105014	CFSPECIAL.792.014	X30.2/X30.2.1	(2x(3x1.5)C+3x(3x10)+1G10)C	35.5
MAT904105015	CFSPECIAL.792.014	X30.3/X30.3.1	(2x(3x1.5)C+3x(3x10)+1G10)C	35.5
Data cable				
MAT904105005	CFBUS.PUR.H01.060	X31/X31.1	((4x0.38)C+4x1.5)C	11.5
Motor cable single axis (axis 7)				
MAT904105006	CF270.UL.25.15.02.01.D	XM.../X...	(4G2.5+(2x1.5)C)C	14.0
MAT904105007	CF270.UL.40.15.02.01.D	XM.../X...	(4G4.0+(2x1.5)C)C	15.0
Motor cable single axis (axis 7)				
MAT904105008	CF270.UL.60.15.02.01.D	XM.../X...	(4G6.0+(2x1.5)C)C	16.5
Control cable (axis 7)				
MAT904105013	CF112.02.04.02	Control cable single axis	(4x(2x0.25)C)C	11.0
Earth-core				
MAT904105010	CFPE.160.01	Connector plate/robot	1G16	9.5

Note: the given outer diameters are maximum values and may tend toward lower tolerance limits.
G = with green-yellow earth core **x =** without earth core
igus® GmbH defines cable length as entire length inlcuding connectors or open harnessing.

readycable® Robot

Direct connection cable - KUKA Titan

Direct connection cables for KUKA Titan, to your required length

Part No.	chainflex® cable	Number of cores and conductor nominal cross section [mm²]	Ø [mm]
Motor cable (direct connection cable)			
MAT904141228	CFSPECIAL.792.014	(2x(3x1.5)C+3x(3x10)+1G10)C	35.5
MAT904141230	CFSPECIAL.792.014	(2x(3x1.5)C+3x(3x10)+1G10)C	35.5
MAT904141231	CFSPECIAL.792.014	(2x(3x1.5)C+3x(3x10)+1G10)C	35.5
Signal cable (direct connection cable)			
MAT904141227	CFBUS.PUR.H01.060	((4x0.38)C+4x1.5)C	11.5

Note: the given outer diameters are maximum values and may tend toward lower tolerance limits.
G = with green-yellow earth core **x =** without earth core
igus® GmbH defines cable length as entire length inlcuding connectors or open harnessing.

readycable® Robot

Harnessed cables - Fanuc M-900iB

Harnessed cables for Fanuc M-900iB, to your required length

Part No.	chainflex® cable	Manufacturer description	Number of cores and conductor nominal cross section [mm²]	Ø [mm]
Motor cable (Extension cable axis 7)				
MAT904117141	**CFSPECIAL.792.015**	RM1.2	(7x(6x2.0))C	36.5
Motor cable (Extension cable axis 7)				
MAT904117142	**CFSPECIAL.792.015**	RM2.2	(7x(6x2.0))C	36.5
Pulse encoder (Extension cable axis 7)				
MAT904117143	**CFSPECIAL.792.016**	RP1.2	(5x(4x0.25)+10x(3x0.75))C	26.5
Earth-core (Extension cable axis 7)				
MAT904117144	**CFPE.160.01**	Earth-core	1G16	9.5
Earth-core (Extension cable axis 7)				
MAT904117145	**CFPE.60.01**	Earth-core	1G6.0	7.0
Motor cable single axis (axis 7)				
MAT904117146	**CF270.UL.60.15.02.01.D**	RM7.2	(4G6.0+(2x1.5)C)C	16.5
Pulse encoder single axis (axis 7)				
MAT904117147	**CF240.PUR.03.03**	RP7.2	(3x0.34)C	5.0

Note: the given outer diameters are maximum values and may tend toward lower tolerance limits.
G = with green-yellow earth core **x =** without earth core
igus® GmbH defines cable length as entire length inlcuding connectors or open harnessing.

readycable® Robot

Direct connection cable - Fanuc M-900iB

Direct connection cables for Fanuc M-900iB, to your required length

Part No.	chainflex® cable	Number of cores and conductor nominal cross section [mm²]	Ø [mm]
Motor cable (direct connection cable)			
MAT904141222	**CFSPECIAL.792.015**	(7x(6x2.0))C	36.5
MAT904141223	**CFSPECIAL.792.015**	(7x(6x2.0))C	36.5
Pulse encoder (direct connection cable)			
MAT904141224	**CFSPECIAL.792.016**	(5x(4x0.25)+10x(3x0.75))C	26.5

Note: the given outer diameters are maximum values and may tend toward lower tolerance limits.
G = with green-yellow earth core **x =** without earth core
igus® GmbH defines cable length as entire length inlcuding connectors or open harnessing.

readycable® Robot

Harnessed cables - Fanuc R-2000iC

Harnessed cables for Fanuc *R*-2000iC, to your required length				
Part No.	**chainflex® cable**	Manufacturer description	Number of cores and conductor nominal cross section [mm²]	Ø [mm]
Motor cable (Extension cable axis 7)				
MAT904117141	**CFSPECIAL.792.015**	RM1.2	(7x(6x2.0))C	36.5
Pulse encoder (Extension cable axis 7)				
MAT904117143	**CFSPECIAL.792.016**	RP1.2	(5x(4x0.25)+10x(3x0.75))C	26.5
Earth-core (Extension cable axis 7)				
MAT904117144	**CFPE.160.01**	Earth-core	1G16	9.5
Earth-core (Extension cable axis 7)				
MAT904117145	**CFPE.60.01**	Earth-core	1G6.0	7.0
Motor cable single axis (axis 7)				
MAT904117146	**CF270.UL.60.15.02.01.D**	RM7.2	(4G6.0+(2x1.5)C)C	16.5
Pulse encoder single axis (axis 7)				
MAT904117147	**CF240.PUR.03.03**	RP7.2	(3x0.34)C	5.0

Note: the given outer diameters are maximum values and may tend toward lower tolerance limits.
G = with green-yellow earth core **x =** without earth core
igus® GmbH defines cable length as entire length inlcuding connectors or open harnessing.

readycable® Robot

Direct connection cable - Fanuc R-2000iC

Direct connection cables for Fanuc *R*-2000iC, to your required length			
Part No.	**chainflex® cable**	Number of cores and conductor nominal cross section [mm²]	Ø [mm]
Motor cable (direct connection cable)			
MAT904141222	**CFSPECIAL.792.015**	(7x(6x2.0))C	36.5
Pulse encoder (direct connection cable)			
MAT904141224	**CFSPECIAL.792.016**	(5x(4x0.25)+10x(3x0.75))C	26.5

Note: the given outer diameters are maximum values and may tend toward lower tolerance limits.
G = with green-yellow earth core **x =** without earth core
igus® GmbH defines cable length as entire length inlcuding connectors or open harnessing.

readycable® Robot

Harnessed cables - ABB IRB 6620, IRB 6640, IRB 6650S, IRB 7600

Harnessed cables for ABB *IRB* 6620, *IRB* 6640, *IRB* 6650S, *IRB* 7600, to your desired length

Part No.	chainflex® cable	Manufacturer description	Number of cores and conductor nominal cross section [mm²]	Ø [mm]
Power cable				
MAT904128539	**CFSPECIAL.792.012**	R1MP	(18G2.5)C	25.5
Signal cable				
MAT904128540	**CF211.PUR.02.06.02**	R1.SMB	(6x(2x0.25))C	9.0
Power cable				
MAT904128547	**CF270.UL.40.15.02.02.D**		(4G4.0+2x(2x1.5)C)C	17.0
Resolver cable				
MAT904128548	**CF211.PUR.02.03.02**		(3x(2x0.25))C	7.0
Earth-core (Extension cable axis 7)				
MAT904117144	**CFPE.160.01**	Earth-core	1G16	9.5

Note: the given outer diameters are maximum values and may tend toward lower tolerance limits.
G = with green-yellow earth core **x =** without earth core
igus® GmbH defines cable length as entire length inlcuding connectors or open harnessing.

readycable® Robot

Direct connection cable - ABB IRB 6620, IRB 6640, IRB 6650S, IRB 7600

Direct connection cable for ABB *IRB* 6620, *IRB* 6640, *IRB* 6650S, *IRB* 7600, to your required length

Part No.	chainflex® cable	Number of cores and conductor nominal cross section [mm²]	Ø [mm]
Motor cable (direct connection cable)			
MAT904141219	**CFSPECIAL.792.012**	(18G2.5)C	25.5
Signal cable (direct connection cable)			
MAT904141220	**CF211.PUR.02.06.02**	(6x(2x0.25))C	9.0

Note: the given outer diameters are maximum values and may tend toward lower tolerance limits.
G = with green-yellow earth core **x =** without earth core
igus® GmbH defines cable length as entire length inlcuding connectors or open harnessing.

readycable® Robot

Harnessed cables - ABB IRB 6700

Harnessed cables for ABB *IRB* 6700, to your desired length				
Part No.	**chainflex® cable**	Manufacturer description	Number of cores and conductor nominal cross section [mm²]	Ø [mm]
Power cable				
MAT904128539	**CFSPECIAL.792.012**	R1MP	(18G2.5)C	25.5
Signal cable				
MAT904128541	**CF211.PUR.02.06.02**	R1.SMB	(6x(2x0.25))C	9.0
Power cable				
MAT904128547	**CF270.UL.40.15.02.02.D**		(4G4.0+2x(2x1.5)C)C	17.0
Resolver cable				
MAT904128548	**CF211.PUR.02.03.02**		(3x(2x0.25))C	7.0
Earth-core (Extension cable axis 7)				
MAT904117144	**CFPE.160.01**	Earth-core	1G16	9.5

Note: the given outer diameters are maximum values and may tend toward lower tolerance limits.
G = with green-yellow earth core **x =** without earth core
igus® GmbH defines cable length as entire length inlcuding connectors or open harnessing.

readycable® Robot

Direct connection cable - ABB IRB 6700

Direct connection cable for ABB *IRB* 6700, to your required length			
Part No.	**chainflex® cable**	Number of cores and conductor nominal cross section [mm²]	Ø [mm]
Motor cable (direct connection cable)			
MAT904141219	**CFSPECIAL.792.012**	(18G2.5)C	25.5
Signal cable (direct connection cable)			
MAT904141221	**CF211.PUR.02.06.02**	(6x(2x0.25))C	9.0

Note: the given outer diameters are maximum values and may tend toward lower tolerance limits.
G = with green-yellow earth core **x =** without earth core
igus® GmbH defines cable length as entire length inlcuding connectors or open harnessing.

readycable® Robot

Harnessed cables - ABB IRB 8700

Harnessed cables for ABB *IRB* 8700, to your desired length				
Part No.	**chainflex® cable**	Manufacturer description	Number of cores and conductor nominal cross section [mm²]	Ø [mm]
Power cable				
MAT904128542	**CFSPECIAL.792.012**	R1MP-A	(18G2.5)C	25.5
MAT904128543	**CFSPECIAL.792.012**	R1MP-B	(18G2.5)C	25.5
Signal cable				
MAT904128541	**CF211.PUR.02.06.02**	R1.SMB	(6x(2x0.25))C	9.0
Power cable				
MAT904128547	**CF270.UL.40.15.02.02.D**		(4G4.0+2x(2x1.5)C)C	17.0
Resolver cable				
MAT904128548	**CF211.PUR.02.03.02**		(3x(2x0.25))C	7.0
Earth-core (Extension cable axis 7)				
MAT904117144	**CFPE.160.01**	Earth-core	1G16	9.5

Note: the given outer diameters are maximum values and may tend toward lower tolerance limits.
G = with green-yellow earth core **x =** without earth core
igus® GmbH defines cable length as entire length inlcuding connectors or open harnessing.

readycable® Robot

Direct connection cable - ABB IRB 8700

Direct connection cable for ABB *IRB* 8700, to your required length			
Part No.	**chainflex® cable**	Number of cores and conductor nominal cross section [mm²]	Ø [mm]
Motor cable (direct connection cable)			
MAT904145759	**CFSPECIAL.792.012**	(18G2.5)C	25.5
MAT904145760	**CFSPECIAL.792.012**	(18G2.5)C	25.5
Signal cable (direct connection cable)			
MAT904141221	**CF211.PUR.02.06.02**	(6x(2x0.25))C	9.0

Note: the given outer diameters are maximum values and may tend toward lower tolerance limits.
G = with green-yellow earth core **x =** without earth core
igus® GmbH defines cable length as entire length inlcuding connectors or open harnessing.

readycable® Robot

Cables according to AIDA specifications*

* AIDA = **A**utomatisierungs**I**nitiative **D**eutscher **A**utomobilhersteller (Automation Initiative of German Domestic Automobile manufacturers)

Harnessed cables according to AIDA specifications, to your required length

Part No.	Robot axis	chainflex® cable	Number of cores and conductor nominal cross section [mm²]	Ø [mm]
AIDA Profinet – RJ45 Pin/ AIDA Profinet – RJ45 Pin				
MAT904117091	Axis 7	CFBUS.PUR.060	(4x0.38)C	7.0
MAT904117095	Axis 1-6	CFROBOT8.060	(2x(2x0.34))C	8.5
AIDA Profinet FOC/ AIDA Profinet FOC				
MAT904117092	Axis 7	CFLK.L1.02	1x980/1,000µm	7.0
upon request [1]	Axis 1-6	CFLK.L1.02	1x980/1,000µm	7.0
AIDA Power Pin/ AIDA Power Pin				
MAT904117093	Axis 7	CF77.UL.25.05.D	5G2.5	10.5
MAT904117097	Axis 1-6	CF77.UL.25.05.D	5G2.5	10.5
AIDA Signal Pin/ AIDA Signal Pin				
MAT904117094	Axis 7	CF211.PUR.05.05.02	(5x(2x0.5))C	10.5
MAT904117098	Axis 1-6	CFROBOT3.05.05.02	(5x(2x0.5))C	12.5

[1] **Offer made only after technical clarification of the application**
Note: the given outer diameters are maximum values and may tend toward lower tolerance limits.
G = with green-yellow earth core **x =** without earth core
igus® GmbH defines cable length as entire length inlcuding connectors or open harnessing.

readycable® Robot

Cables according to AIDA specifications* New

* AIDA = **A**utomatisierungs**I**nitiative **D**eutscher **A**utomobilhersteller (Automation Initiative of German Domestic Automobile manufacturers)

Harnessed extension cables according to AIDA specifications, to your required length

Part No.	Robot axis	chainflex® cable	Number of cores and conductor nominal cross section [mm²]	Ø [mm]
AIDA Profinet – RJ45 Socket/ AIDA Profinet – RJ45 Pin				
MAT904152118	Axis 7	CFBUS.PUR.060	(4x0.38)C	7.0
MAT904152121	Axis 1-6	CFROBOT8.060	(2x(2x0.34))C	8.5
AIDA Profinet – RJ45 Socket/ AIDA Profinet – RJ45 Socket				
MAT904151684	Axis 7	CFBUS.PUR.060	(4x0.38)C	7.0
MAT904151687	Axis 1-6	CFROBOT8.060	(2x(2x0.34))C	8.5
AIDA Power Socket/ AIDA Power Pin				
MAT904152119	Axis 7	CF77.UL.25.05.D	5G2.5	10.0
MAT904152122	Axis 1-6	CF77.UL.25.05.D	5G2.5	10.0
AIDA Power Socket/ AIDA Power Socket				
MAT904151685	Axis 7	CF77.UL.25.05.D	5G2.5	10.0
MAT904151688	Axis 1-6	CF77.UL.25.05.D	5G2.5	10.0
AIDA Signal Socket/ AIDA Signal Pin				
MAT904152120	Axis 7	CF211.PUR.05.05.02	5x(2x0.5))C	11.0
MAT904152123	Axis 1-6	CFROBOT3.05.05.02	5x(2x0.5))C	11.0
AIDA Signal Socket/ AIDA Signal Socket				
MAT904151686	Axis 7	CF211.PUR.05.05.02	5x(2x0.5))C	11.0
MAT904151689	Axis 1-6	CFROBOT3.05.05.02	5x(2x0.5))C	11.0

Note: the given outer diameters are maximum values and may tend toward lower tolerance limits.
G = with green-yellow earth core **x =** without earth core
igus® GmbH defines cable length as entire length inlcuding connectors or open harnessing.

igus® readychain®

Ready-to-install harnessed e-chain systems® for robots

Assembled energy supply systems, connectors and cables from igus®. Everything from one source, directly from the manufacturer, delivered quickly to your machine

Ready-to-install systems, from connectors through assembled cables up to complex energy supply modules, delivered in 1-10 days

Customer-specific production

From one off to mass production

readychains® - increase your capacity and cash flow quickly with igus®

- Reduce overhead costs
- Reduce your throughput times from days to hours
- Respond flexibly to order variations
- Utilise igus® manufacturing capacities and our know-how in cable assembly

Reduce the number of suppliers and orders by 75%

- One order, one invoice, one delivery
- A partner for minimal machine downtimes
- All readychain® components are subjected to extensive quality checks and function tests

readychain®

You decide, igus® delivers

Industrially harnessed energy chain modules direct from the manufacturer
... You decide the quantity, the travel and the degree of harnessing ...

3 Benefits: readychain® basic

1. ONE supplier - combine all component suppliers
2. Reduce assembly time
3. Reduce failures

Reduction of assembly time
Reduction of logistics cost
Procurement optimisation

Further information, videos, configurators and product finders
▶ www.igus.eu/RCbasic

6 Benefits: readychain® standard

4. No electrical termination needed
5. 100% digitally tested
6. No cable surplus

Reduction of assembly time
Reduction of logistics cost
Procurement optimisation

Further information, videos, configurators and product finders
▶ www.igus.eu/RCstandard

9 Benefits: readychain® standard+

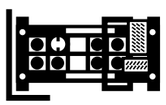

7. Reduce interfaces
8. Optimise connections/interfaces
9. Ready-to-install multi-axis system

Reduction of assembly time
Reduction of logistics cost
Procurement optimisation

Further information, videos, configurators and product finders
▶ www.igus.eu/RCstandard+

13 Benefits: readychain® premium

10. Optimise your transport / assembly
11. One single assembly
12. One Part No. / Product group
13. Plug & Play

Reduction of assembly time
Reduction of logistics cost
Procurement optimisation

Further information, videos, configurators and product finders
▶ www.igus.eu/RCpremium

igus® readychain®

The igus® readychain® factory

Up to 1,600 readychain® systems per week, over 4,700m² floor space, "chain-cable-guarantee" since 1989. 3 shifts, 24 project engineers, 359 employees just for assembly

In the igus® readychain® factory, we assemble customised e-chain systems®.

Up-to-date production processes, custom-build or serial production

Full service from system acceptance to installation

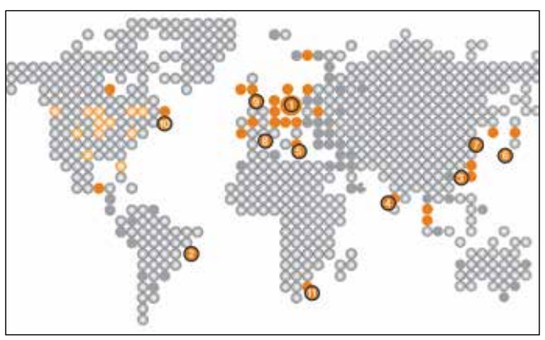

12 readychain® factories worldwide

Customised cable assembly

readychain® rack system

Modular, quick and ready to install

1 Everything from one source

The readychain® system includes pre-assembled, customised e-chain systems®. The "Plug & Play" solutions are configured, manufactured and delivered according to individual customer specifications. The use of the mounting rack can yield benefits even at low quantities.

2 Flexible components

The telescopic supports and braces of the readychain® rack allow flexible adaptation to the installation needs on site. Changes in serial production can be undertaken easily. By using modular parts, additional components can also be easily attached to the rack.

3 Sustainable use

The components of the readychain® rack are galvanised and thus designed for a long life. Each rack can be constructed within a few hours. The individual elements can be reused at any time removing the need to dispose of custom made parts, such as conventional welded transport racks.

4 Precise fitting "Plug & Play"

All interfaces and attachments are designed in such a way that the installation of the e-chain® can be managed quickly and easily. The complete package includes the matching plugs and connectors, plates, sensor actuator boxes, linear bearings, links to the central lubrication etc., all reducing the installation time considerably.

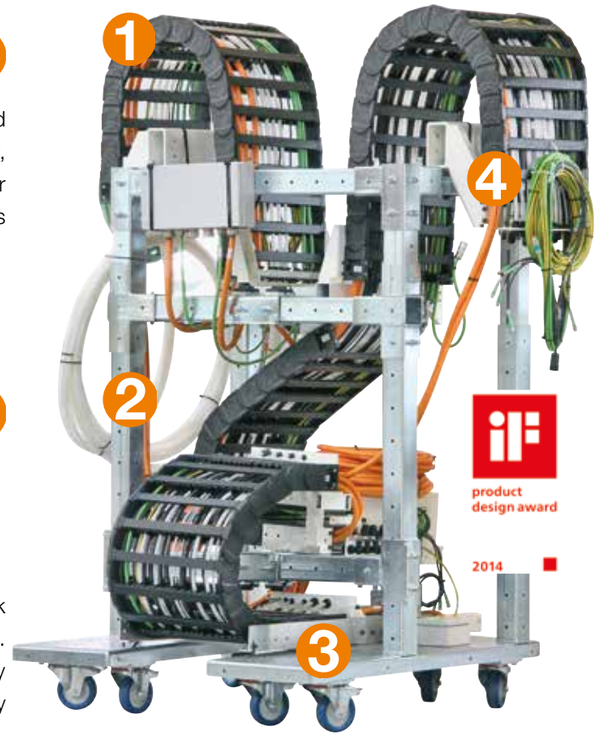

80% savings during prototyping. Assembly transport rack for ready-to-install energy supply systems.

igus® readychain®

Connectors, cables and accessories

igus® connectors

Round connector kit

Square connector kit

Tools and accessories

igus® readycable®

4,600 drive cables suitable for 24 manufacturers, in 7 cable qualities

Catalogue standards: video-/vision-/bus technology

Catalogue standards: network/ethernet/FOC/Field bus

Catalogue standards: CF.INI initiator cables up to 4 x d

igus® hoses and attachments

Configured online with hose cable configurator

readychain®

Configured, fitted, with system guarantee

1 System acceptance
2 Project phase
3 Initial acceptance of prototype
4 igus® installation

readychain® service

- We visit you
- Define interfaces
- Logistics planning
- Cycle integration
- Time schedule

System acceptance on your machine

readychain® service

- Component selection
- Interface optimisation
- Documentation
- Integrated project management
- Cost optimisation

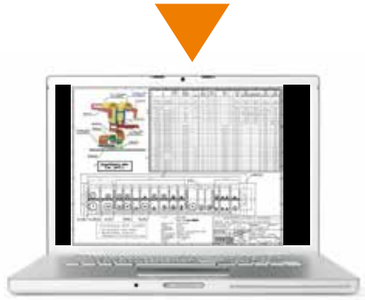

Project planning

readychain® Skype service*

- Initial acceptance from your work place
- Build your prototype with an igus® project engineer, live in your meeting
- Your requests for changes explained with a model or visit us for production acceptance

*Only available in Germany

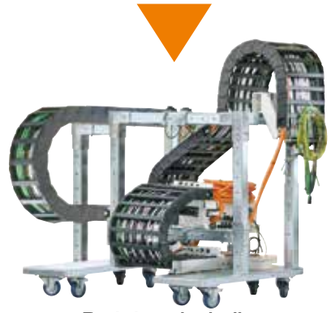

Prototype including transport rack

readychain® installation

- System installation by igus® specialists
- igus® supervision service for your own installation
- Transparent, fixed price

Installation on site

igus® readychain®

Ready to install harnessed e-chain systems® for robots

Capacity for 600,000 assembled cables a year, more than 18,000 test programmes, 1,800 test adapters

Process reliability - crimp forces monitored, automated and time-optimised

Computer-based high-voltage testing and inspection of all assembled cables

Modern machinery - automatic stripper-crimper

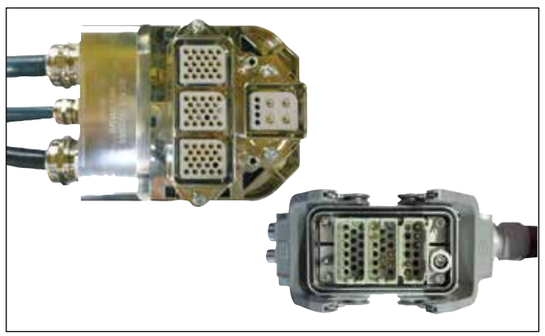

Special cable assemblies to your specifications

Unique guarantees for e-chains® and chainflex® cables

readychain®

igus® - everything from stock

In our warehouse the material waits for your order and not your order for the materials!

igus® warehouse for e-chains®:

100,000 e-chain® components ... hundreds of metres of guide troughs ... numerous strain relief solutions

igus® warehouse für chainflex® cables:

5 million metres of cable ... 3,800m² test lab with more than 15,000 tests every year ... more than 8,000 cables per week

igus® warehouse for harnessing:

5,000 connector components ... everything ready for use immediately ... just-in-time

triflex® R assembly

Assembly videos online

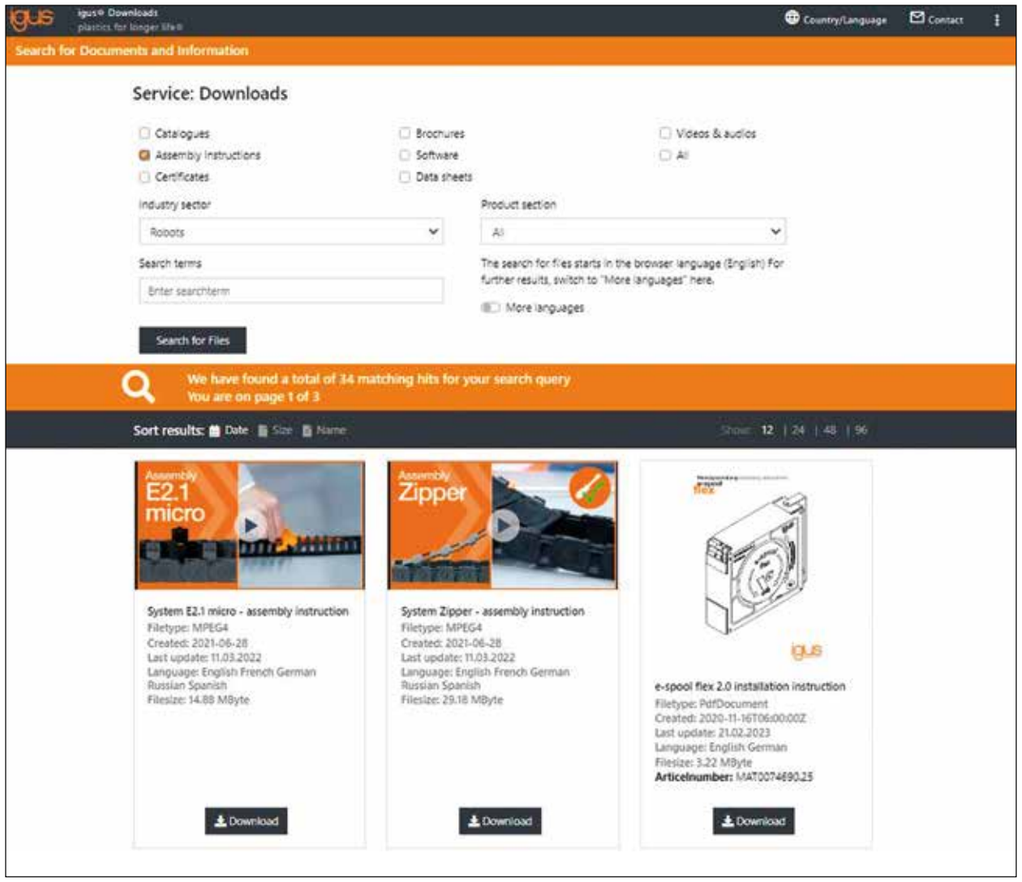

You can also find installation instructions and assembly videos online, in the igus® service and download area ▶ **www.igus.eu/downloads**

triflex® R TRC

Assembly instructions

Joining | TRC.30 · TRC.40 · TRC.50 · TRC.60 · TRC.70 · TRC.85 · TRC.100

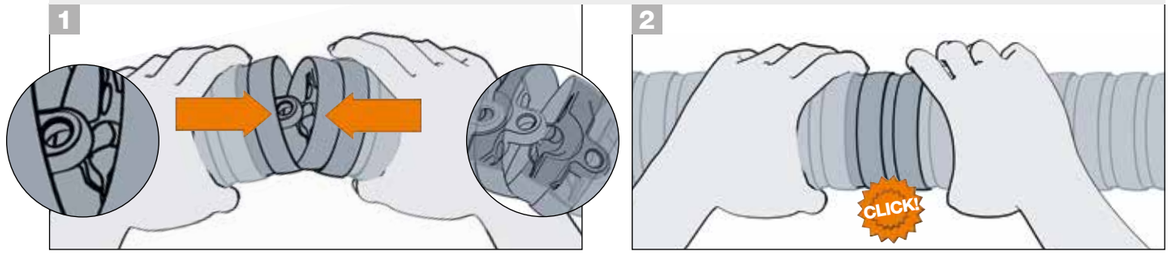

Engage the e-chain® links on the lower side. Use the chamfered side of the ball to open the socket and click together.

Disassembly | TRC.30 · TRC.40 · TRC.50 · TRC.60

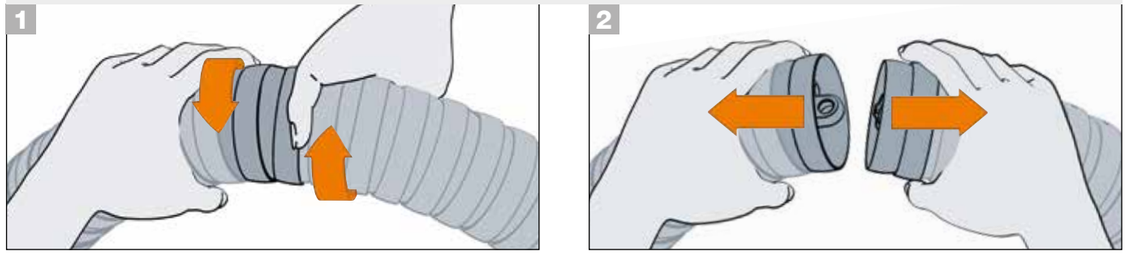

To disassemble the triflex® R TRC.30, TRC.40 and TRC.60, move it to the bend radius stop-dog and turn anti-clockwise.

Disassembly | TRC.70 · TRC.85 · TRC.100

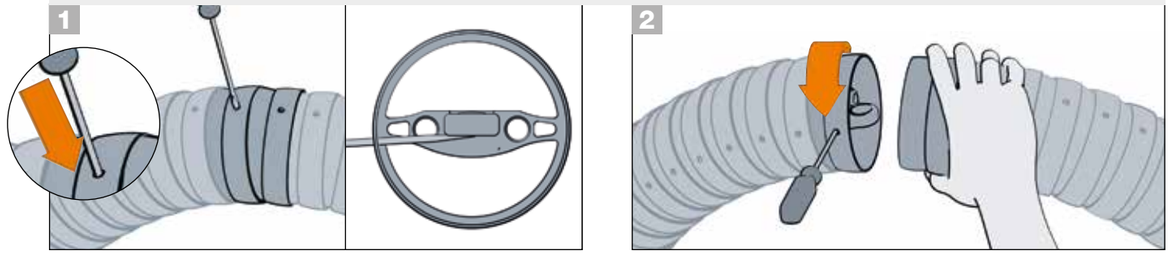

Bend the e-chain® into the radius, press into the opening with the screw contour with a screwdriver (predetermined breaking point), insert approx. 5mm between the ball and socket and use this as a lever arm to lever it counter-clockwise.

Disassembly | TRC.125

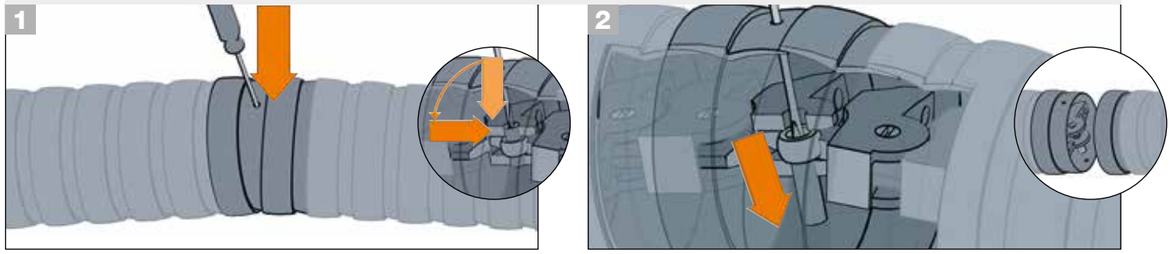

Align the e-chain® with the igus® logo downwards. Unlock the bolt from above with a slotted screwdriver by turning it 90° and push it down. Then push the e-chain® links apart without exerting force.

triflex® R TRE.B

Assembly instructions

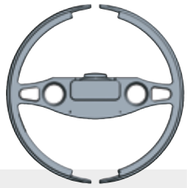

Joining | TRE.B

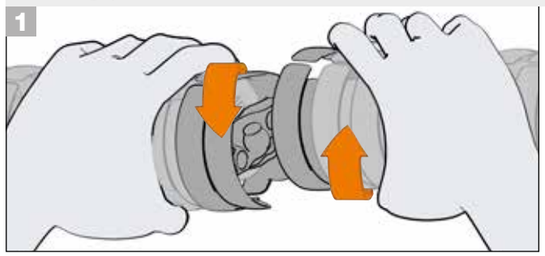

Guide the e-chain® links together at the lower radius stop-dog and push the socket over the ball by turning it slightly. Snap the ball into place by pressing the socket with an audible "click".

Disassembly | TRE.B

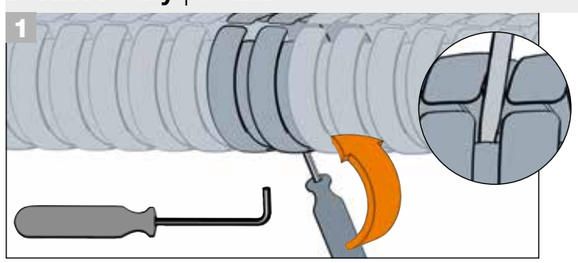

Insert the dismantling tool into the e-chain® from below.

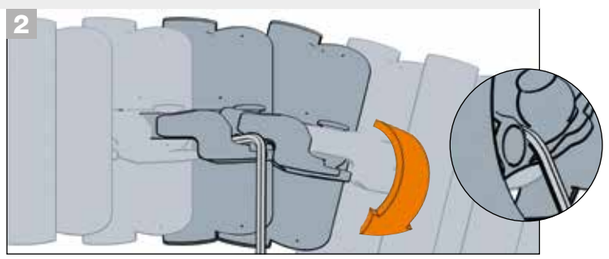

Hook the tool between the ball and socket from the front.

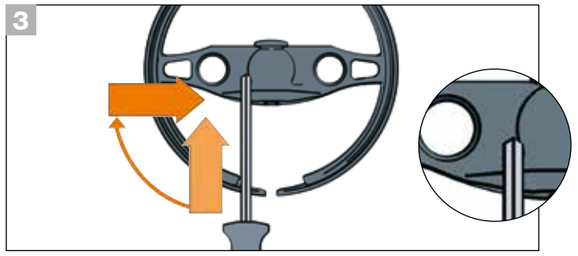

Insert the tool next to the ball and socket and turn the e-chain® 45° counter-clockwise.

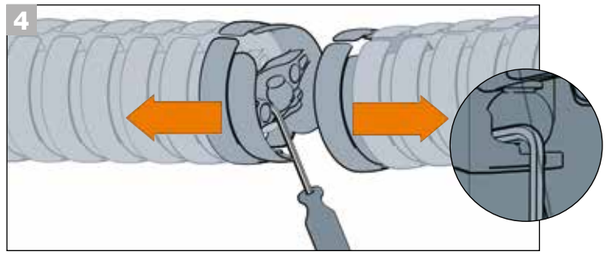

After the socket has been lifted above the ball, the e-chains® links can be separated by twisting them slightly.

Filling / removing | TRE.B

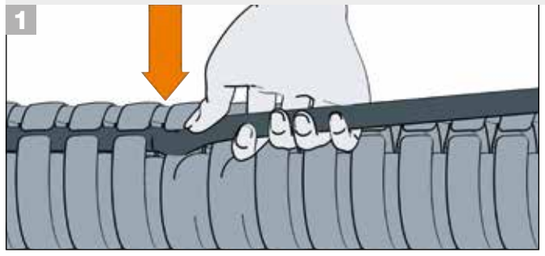

Easy filling with ""easy" design - simply press in ... or pull out cables.

triflex® R TRE.C

Assembly instructions

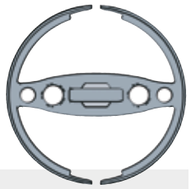

Joining | TRE.100.C · TRE.125 · TRC.125

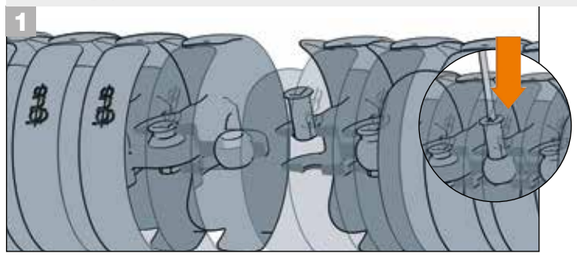

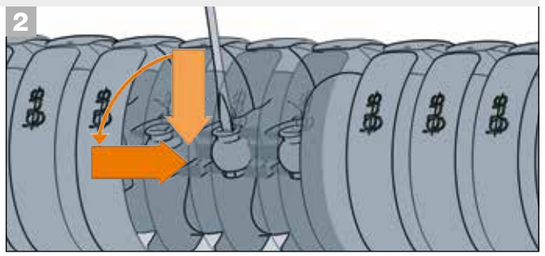

Join the e-chain® links together, push in the bolt with a screwdriver. Lock the bolt with a 90° turn.

Disassembly | TRE.C

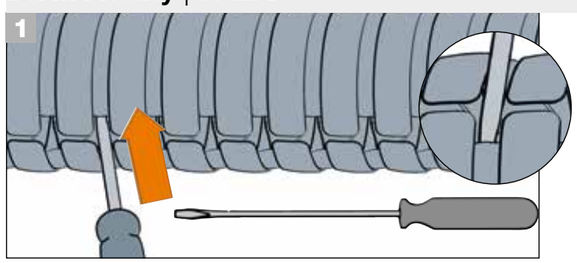

Insert the slotted screwdriver through the "easy" slot in the middle of the e-chain®.

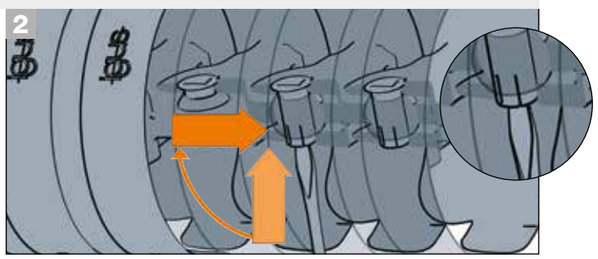

Unlock the bolt by turning it 90°.

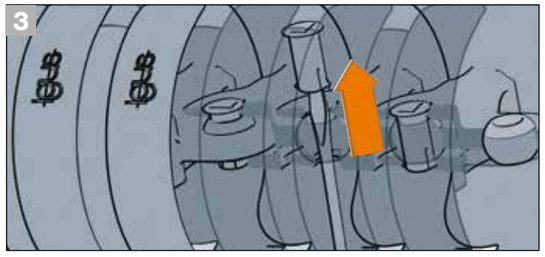

Push the bolt through.

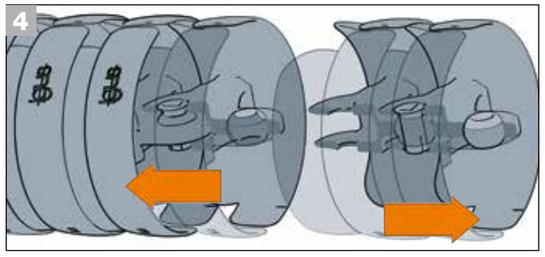

Push e-chain® links apart without exerting any force.

Filling / removing | TRE.C

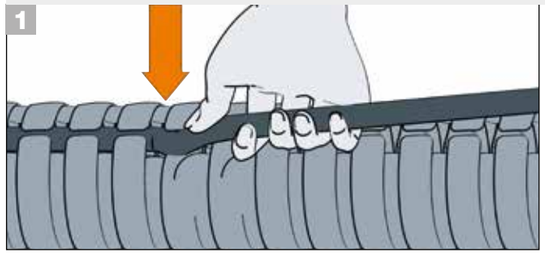

Easy filling with ""easy" design - simply press in ... or pull out cables.

triflex® R TRCF

Assembly instructions

Joining | TRCF

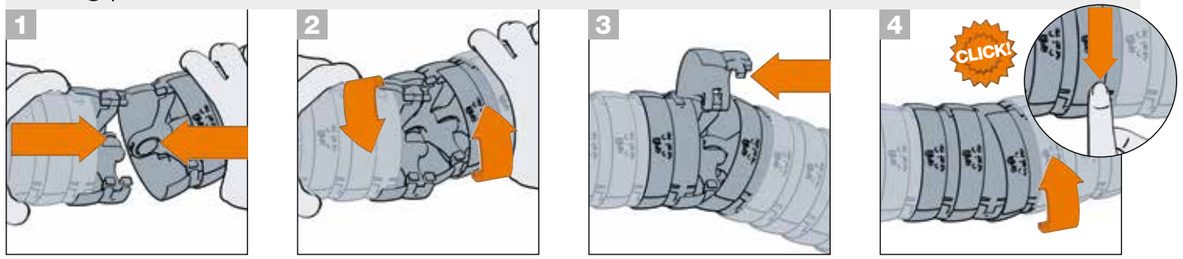

Put the e-chains® parts at an angle and push them firmly together.

To close, simply push the open chain link shut.

Disassembly | TRCF

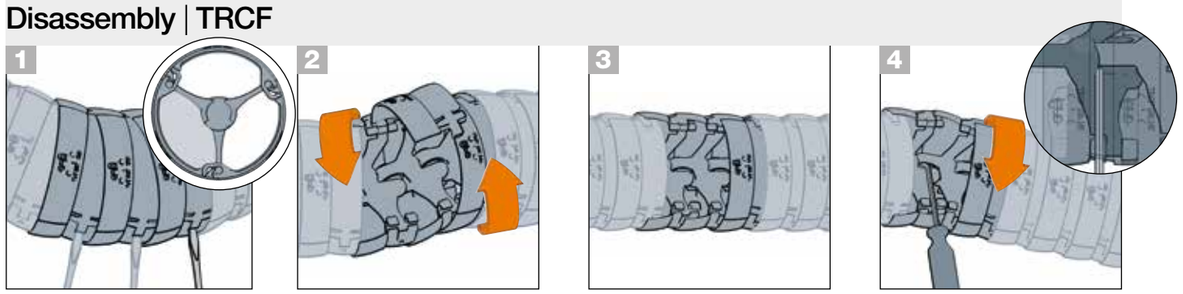

Using a screwdriver on three e-chain® links, unlock the lid at the marked segment. Then swing open the two lids by slightly twisting the e-chain® links towards each other. Insert the dismantling tool between the ball and socket.

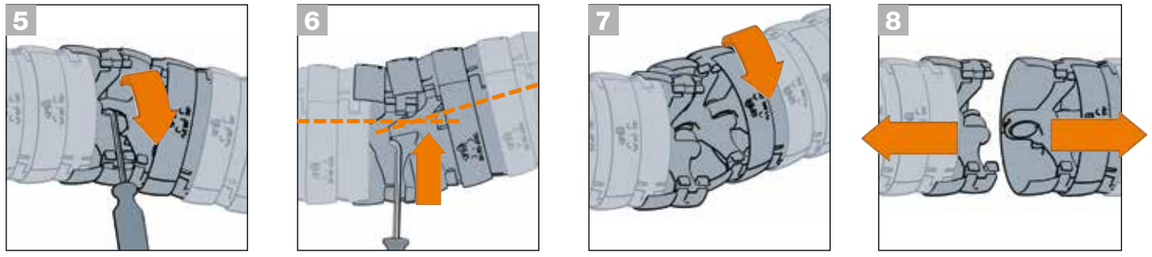

Then lever the socket over the ball by twisting the e-chain® links against the stop-dog of the dismantling tool. Bend the e-chain® slightly, then twist and pull apart.

Open | TRCF

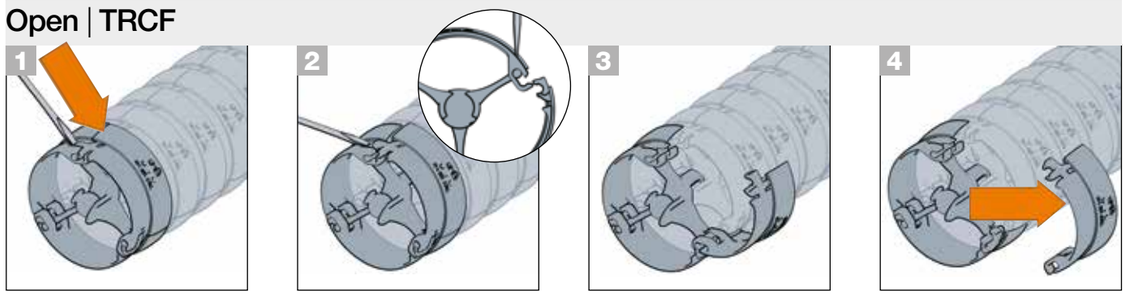

Open the lids with a screwdriver

The lids can then be removed if desired in the open state.

triflex® R TRL

Assembly instructions

Joining | TRL

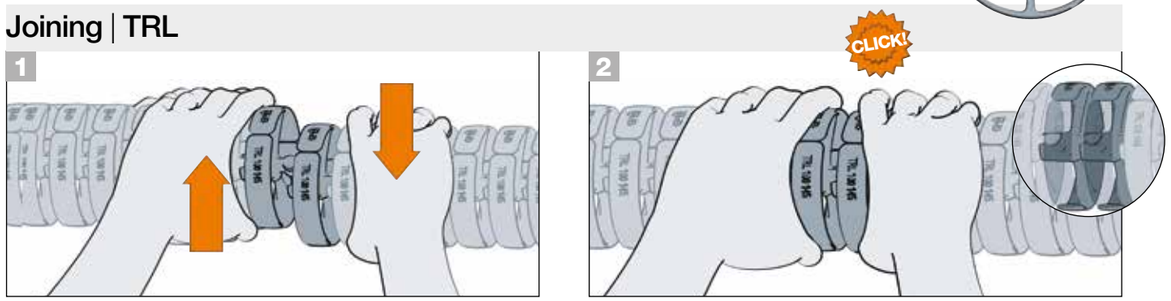

Place the ball with the round side over the socket.

Push the ball into the socket ...

Disassembly | TRL

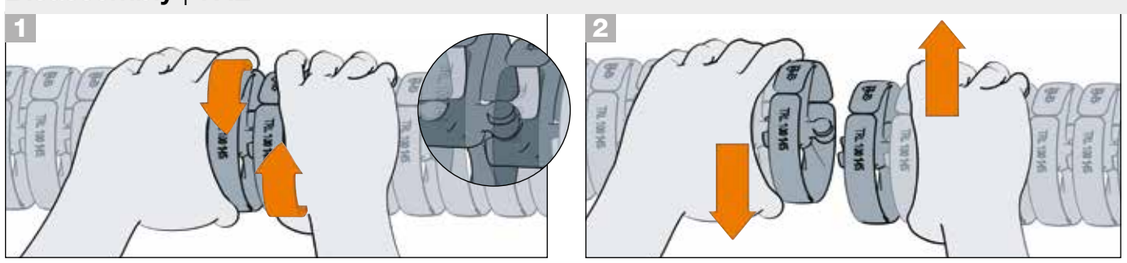

Slightly twist the e-chain® links towards each other and push the ball sideways out of the socket.

Filling / removing | TRL

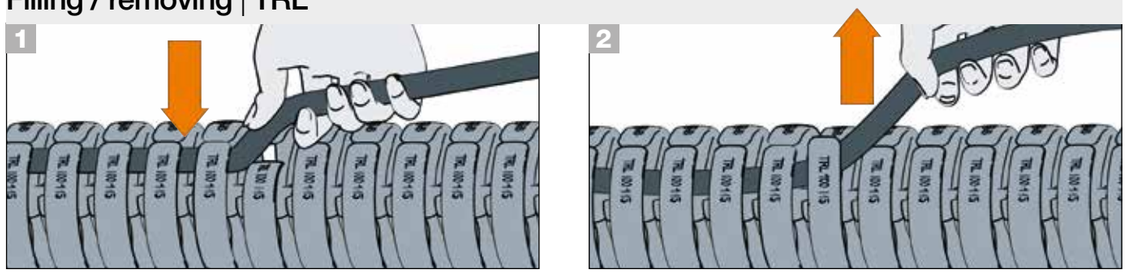

Easy filling with ""easy" design - simply press in ... or pull out cables.

triflex® R TRLF

Assembly instructions

Joining | TRLF

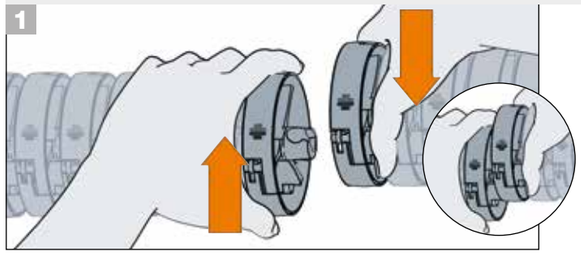

Place the ball with the round side over the socket.

Push the ball into the socket.

Disassembly | TRLF

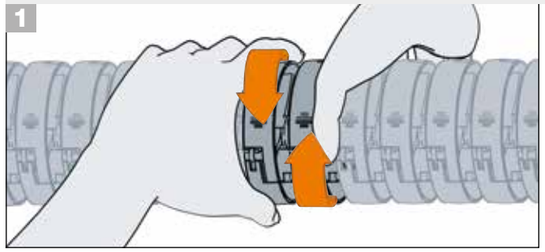

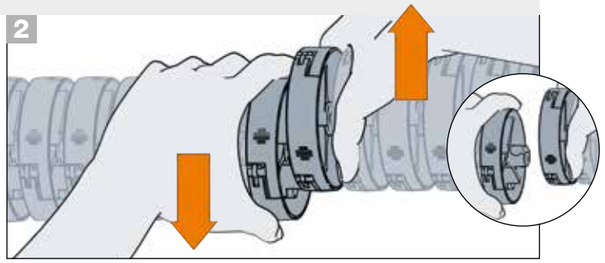

Slightly twist the e-chain® links towards each other and push the ball sideways out of the socket.

Open | TRLF

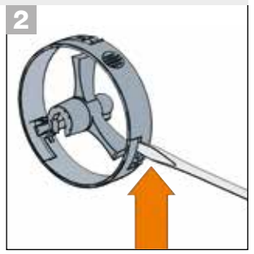

To open, pull up a lid by hand or insert a screwdriver into the notch and lever open.

Close | TRLF

To close - push by hand until you hear a "click".

triflex® R assembly

Installation Instructions - Mounting Brackets & Assembly Tools

Open | Standard mounting brackets

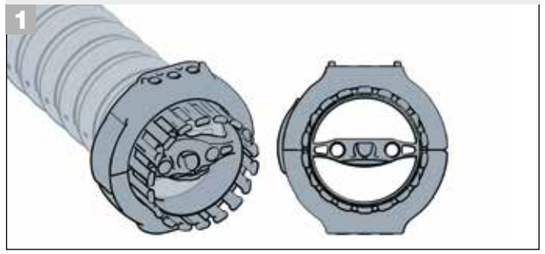

Standard mounting brackets can be opened without tools.

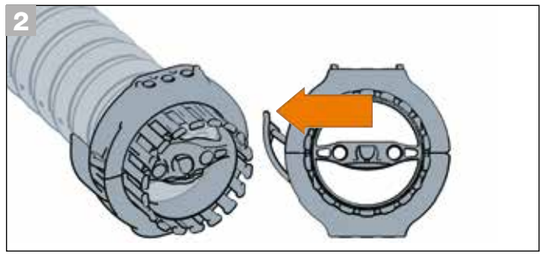

Open the lock without tools by loosening the clamping lever.

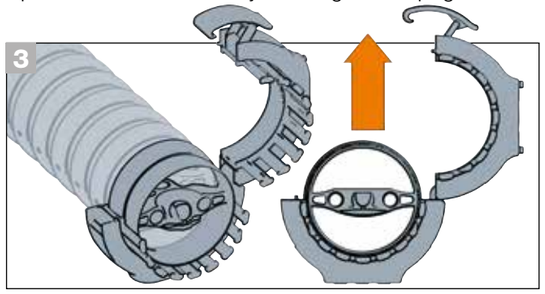

Open the mounting bracket and remove the e-chain®

Open | Light mounting brackets

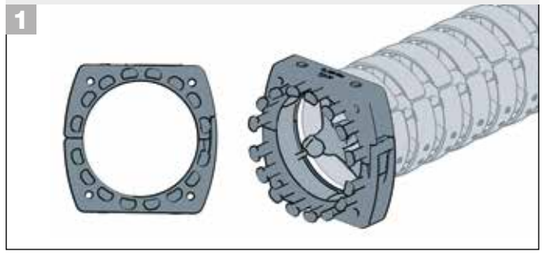

The light mounting brackets can simply be opened with a flat-head screwdriver.

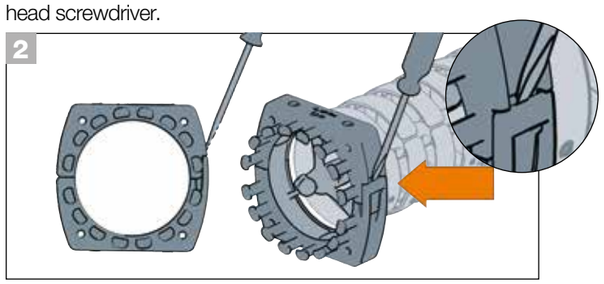

Unlock the internal plastic nose with a screwdriver.

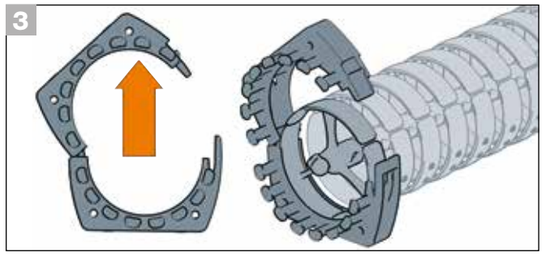

Open the mounting bracket and remove the e-chain®

Note: triflex® R series TRE, TRE.B - TRE.LOCK clips ensure a secure fit in the mounting bracket. Supplied with every mounting bracket.

Which tool do I need for disassembly for which series?

Easy-to-use disassembly tools for triflex® TRE (B version) and TRCF. Easy disassembly at any point along the e-chain®, even when full.

For series TRE.B	Part No. Disassembly tool
TRE.40.B	MAT0050175
TRE.50.B	MAT0051190
TRE.60.B / TRE.70.B	MAT0051135
TRE.85.B	MAT0050170
TRE.100.B	MAT0050172

For series TRE.B	Part No. Disassembly tool
TRCF.65	MAT0051135
TRCF.85	MAT0050170
TRCF.100	MAT0050172

Robotics industry
My sketches

Robotics industry
My sketches

Robotics industry
My sketches

Robotics industry
My sketches

igus® locations

igus® worldwide

igus® Offices

igus® Distributors

1 Germany
igus® GmbH
Spicher Str. 1a
51147 Köln
P.O. Box 90 61 23
51127 Köln
Phone 02203 9649-0
Fax 02203 9649-222
info@igus.de

2 Argentina
Borintech SRL
Av. Elcano 4971
C1427CIH Buenos Aires
Phone +5411 4556 1000
Fax +5411 4556 1000
igus@borintech.com

3 Australia
Treotham Automation Pty. Ltd.
14 Sydenham Road
Brookvale NSW 2100
Phone +61 2 9907-1788
Fax +61 2 9907-1778
info@treotham.com.au

4 Austria
igus® polymer Innovationen GmbH
Photo-Play-Straße 1
4860 Lenzing
Phone +43 7662 57763
Fax +43 7662 57751
igus-austria@igus.de

5 Belarus
SOOO Hennlich
Biryuzova street, 4/5, office 1012
220073 Minsk
Republik Belarus
Phone +375 17 258 88 28
Fax +375 17 373 39 26
info@hennlich.by

6 Belgium/Luxemburg
igus® B.V.B.A.
Jagersdreef 4A
2900 Schoten
Phone +32 3 330 13 60
Fax +32 3 313 79 91
info@igus.be

7 Bosnia + Herzegowina
HENNLICH industrijska tehnika d.o.o.
Tvornička 3
(Energoinvest-zgrada C&O)
BiH-71210 Ilidža - Sarajevo
Phone +387 33 451 439
Fax +387 33 451 439
info@hennlich.ba

8 Brazil
igus® do Brasil Ltda.
Rua Antônio Christi, nº 611
Parque Industrial III – FAZGRAN
Jundiaí – CEP 13213-183 – SP
Phone +55 11 3531-4487
Fax +55 11 3531-4488
vendas@igus.com.br

9 Bulgaria
Hennlich OOD, BG
4003 Plovdiv, Bulgaria
147A, Brezovsko shose Str.,
Rota center, fl. 3
Phone +359 32 511 326
Fax +359 32 621 929
office@hennlich.bg

10 Canada
igus® Office Canada
Suite 100-180
Bass Pro Mills Dr
Vaughan, ON L4K 5W4
Phone +1 905 7608448
Fax +1 905 7608688
webmaster@igus.com

11 Chile
Vendortec
Avda. Los Pajaritos 3195,
Oficina 1410
Edificio Centro Maipú
Maipú – Santiago
Phone +56 22 710 58 25
+56 23 245 02 00
ventas@vendortec.cl

12 China
igus® Shanghai Co., Ltd.
No.50, North Huancheng Road
Fengxian district
Shanghai 201401
P. R. China
Phone +86 21 8036 6999
Fax +86 21 8036 6116
cnmaster@igus.net

13 Colombia
PRODUCTOS I SAS
Carrera 28a, 15-18 Local 1,
Paloquemao, Bogotá
Phone +57 1 561 2959
ext. 113
igus@igus.com.co

14 Costa Rica
Enesa Equipos Neumaticos S.A.
Del Colegio Marista
100 este, 200 sur, 25 este
Urbanizacion Ciruelas
Alajuela, Costa Rica
Phone +506 2440-2393
Fax +506 2440-2393
equiposneumaticos@enesa.net

15 Croatia
Hennlich, Industrijska d.o.o.
Stupničkoobreška 17
Stupnički Obrež
10255 Gornji Stupnik
Phone +385 1 3874334
Fax +385 1 3874336
hennlich@hennlich.hr

16 Czech Republic
HENNLICH s.r.o.
Českolipská 9
412 01 Litoměřice
Phone e-chains®
+420 416 711332
Phone Plain bearings
+420 416 711339
Fax +420 416 711999
lin-tech@hennlich.cz

17 Denmark
igus® ApS
Lysholt Alle 8
DK-7100 Vejle
Phone +45 86 603373
Fax +45 86 603273
info@igus.dk

18 Ecuador
Ecuainsetec
Yugoeslavia N34-110 y Azuay
Quito
Phone +593 2 2253757
Fax +593 2 2461833
infouio@ecuainsetec.com.ec

19 Egypt
IEE International Company for Electrical Engineering
2nd floor, 25 Orabi St
Down Town, Cairo
Phone +202 25767370
Fax +202 25767375
sales@iee-egypt.com

20 Estonia
igus® OÜ
Vana-Tartu mnt 79a
75312 Peetri
Phone +372 667 5600
info@igus.ee

21 Finland
OEM Finland OY
Fiskarsinkatu 3
20750 Turku
PL 9, 20101 Turku
Phone +358 20 7499499
Fax +358 20 7499456
info@oem.fi

22 France
igus® SARL
49, avenue des Pépinières
Parc Médicis
94260 Fresnes
Phone +33 1 49840404
Fax +33 1 49840394
info@igus.fr

23 Greece
J. & E. Papadopoulos S.A.
12 Polidefkous str
Piraeus, 185 40
Phone +30 210 4113133
Fax +30 210 4116781
sales@papadopoulos-sa.com

24 Hong Kong
Sky Top Enterprises Ltd.
Room 1806 ; Block C; Wah Tat Industrial Center; Wah Sing Street; Kwai Chung Hong Kong
Phone +852 23318928
Fax +852 24269738
info@skytop.com.cn

25 Hungary
igus® Hungária Kft.
Ipari Park u.10.
1044 Budapest
Phone +36 1 3066486
Fax +36 1 4310374
info@igus.hu

25 Hungary
Tech-Con Kft.
Vésö utca 9-11
1133 Budapest
Phone +36 1 4124161
Fax +36 1 4124171
tech-con@tech-con.hu

26 India
igus® (India) Pvt. Ltd.
36/1, Sy No. 17/3
Euro School Road,
Dodda Nekkundi Industrial Area, - 2nd Stage
Mahadevapura Post
Bangalore 560048
Phone +91 80 68127800
Fax +91 80 68127802
info-in@igus.net

27 Indonesia
PT igus® Indonesia
Headquarter Indonesia
Taman Tekno BSD
Sektor XI, Blok L1 No. 15
Tangerang Selatan 15314
Phone +62 21 7588 1933
Fax +62 21 7588 1932
info@igus.co.id

28 Ireland
igus® Ireland
Caswell Rd
Northampton NN4 7PW
Phone +44-1604 677240
Fax +44-1604 677242
sales@igus.ie

29 Israel
Conlog LTD
P.O. Box 3265
17 Hamefalssim Str.
Industrial Zone Kiryat Arie
Petach-Tikva 49130
Phone +972 3 9269595
Fax +972 3 9233367
conlog@conlog.co.il

30 Italy
igus® S.r.l.
Via delle Rovedine, 4
23899 Robbiate (LC)
Phone +39 039 5906.1
Fax +39 039 5906.222
igusitalia@igus.it

31 Japan
igus® k.k.
Arcacentral 15F, 1-2-1 Kinshi,
Sumida-ku Tokyo JAPAN
Zip 130-0013
Phone +81 358 192030
Fax +81 358 192055
info@igus.co.jp

32 Kazakhstan
HENNLICH TOO
Nursultan Nazar-Baev Pros.
Build. 4
100002 Kazybek Bi R-N,
Karaganda
Tel. +7 701 419 0756
igus@hennlich.kz

33 Kenya
Mantrad Ltd.
Sterling House, 1St. Floor
Moi Avenue, Mombasa
Phone + 254 722 706 830
Fax + 254 720 765 566
info@mantrad.co.ke

34 Latvia
Techvitas SIA
Daugavas iela 38-3
Mārupe, LV-2167
Phone +371 22 325 004
i_igusLettland_G@igus.de

35 Lebanon
Mecanix Shops SAL
Horsh Tablet - Ste Rita blvd
P.O.Box: 55384 Beirut
Phone +961 1 486701
Fax +961 1 490929
sales@mecanixshops.com

36 Lithuania
Hitech UAB
Terminalo g. 3
54469 Biruliskiu k. (Kauno LEZ)
Kauno raj.
Phone +370 37 323271
Fax +370 37 203273
info@hitech.lt

37 Mazedonien, Albania, Kosovo
Hennlich doo Beograd
Radomira Markovića 1/3
11222 Beograd
Phone +381 11 63 098 17
Fax +381 11 63 098 20
office@hennlich.rs

38 Malaysia
igus® Malaysia Sdn Bhd
Suite 1601-1, Level 16,
Tower 2, Wisma AmFirst,
Jalan SS 7/15 (Jalan Stadium),
47301 Kelana Jaya, Selangor
Phone +603 7803 0618
Fax +603 7886 1328
info@igus.my

39 Morocco
AFIT
5, Rue Amir Abdelkader
20300 Casablanca
Phone +212 522 633769
Fax +212 522 618351
souria.vu@premium.net.ma

40 Mexiko
igus® México S. de R.L. de C.V.
Boulevad Aeropuerto Miguel Alemán 160 Int. 135
Col. Corredor Industrial Toluca Lerma
Lerma, Estado de México C.P. 52004
Phone +52 728284 3185
Fax +52 728284 3187
fmarquez@igus.com

41 Middle East (except of UAE)
JISigus Middle East FZE
FF07, Jebel Ali Free Zone
PO Box- 17483
Dubai, United Arab Emirates
Phone +971 4222 1185
Fax +971 4222 1186
info@jisigus.com

42 Myanmar
Sea Lion Co. Ltd.
181 Bo Myat Tun St
Botataung Yangon
11161 Myanmar
Phone +95 1 29 97 97
Fax +95 1 20 27 51
zaw.m.thant@sealionmyanmar.com

43 Netherlands
igus® B.V.
Sterrenbergweg 9
3769 BS Soesterberg
Phone +31 346 353932
Fax +31 346 353849
info@igus.nl

43 Netherlands – dry-tech®
Elcee B.V.
Kamerlingh Onnesweg 28
NL-3316 GL Dordrecht
Phone +31 (0)78-654 47 77
Fax +31 (0)78-654 47 33
info@elcee.nl

44 Nigeria
Deepee Industrials Ltd.
11 Ishaga Road Surulere
Lagos
Phone +234 803 3899107
ovoachinike@deepeeindustrials.com

45 New Zealand
Treotham Automation Pty Ltd.
Level 4, 21 Putney Way
Manukau, Auckland 2104
Phone +64 9 278 6577
Fax +64 9 278 6578
info@treotham.co.nz

46 Norway
ASI Automatikk AS
Sankt Hallvards vei 3, port 8
3414 Lierstranda
Phone +47 9006 1100
info@asiflex.no

47 Peru
PROIGUS S.A.C.
Calle Bolivar 388/of. 203
Miraflores
Lima 18 – Perú
Phone +51 1 2414370
Fax +51 1 2428608
profacoventas@profaco.com

48 Pakistan
GEMS International Trading
501, Windsong Place, Block 7&8,
K.C.H.S, Off Shaheed-e-Millat Rd.
Karachi - 75350
Phone +92 21 34531505
marketing@gemsinter.com

49 Philippines
Silicon Exponents Corp.
Unit 1-B, 8414 LMN Bldg.
Dr. A. Santos Avenue Brgy.BF
Homes Sucat Parañaque City
1700 Philippines
Phone +63 2 8250 126/135
Fax +63 2 8250 141
ryemrigor@sieplus.ph

50 Poland
igus® Sp. z o.o.
ul. Działkowa 121C
02-234 Warszawa
Phone +48 22 8635770
Fax +48-22 8636169
info@igus.pl

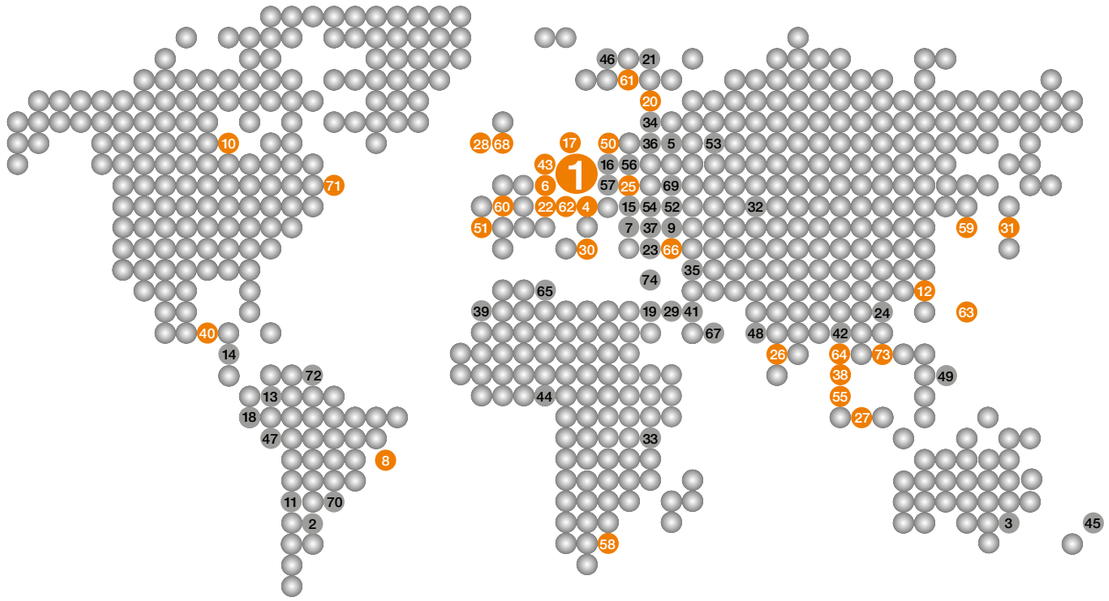

51 Portugal
igus® Lda.
R. Eng. Ezequiel
Campos, 239
4100-231 Porto
Phone +351 22 6109000
Fax +351 22 8328321
info@igus.pt

52 Romania
Hennlich SRL
Str. Timotei Cipariu, Nr. 5-7
310213 Arad
Phone +40 257 211119
Fax +40 257 211021
igus@hennlich.ro

53 Russia
OOO Hennlich
Room 14
Naberezhnaya reki Lazuri, 15A
170028 Tver
Russian Federation
Phone +7 4822 787 180
Fax +7 4822 787 180, add. 380
hennlich@hennlich.ru

54 Serbia + Montenegro
Hennlich doo Beograd
Radomira Markovica 1/3
11222 Beograd / Srbija
Phone +381 11 63 098 17
Fax +381 11 63 098 20
office@hennlich.rs

55 Singapore – ASEAN HQ
igus® Singapore Pte Ltd
84 Genting Lane
#06-03 Axxel Innovation Centre
Singapore 349584
Phone +65 6487 1411
info@igus.com.sg

56 Slovakia
Hennlich s.r.o.
Na Bystricku 16
SK-036 01 Martin
Phone +421 43 421 2352
lintech@hennlich.sk

57 Slovenia
Hennlich d. o. o.
Ulica Mirka Vadnova 13
SI-4000 Kranj
Slovenija
Phone +386 4 53206-10
info@hennlich.si

58 South Africa
igus® Pty. Ltd.
Unit 29
Midline Business Park
Cnr Le Roux & Richards Drive
Midrand 1682
Phone +27 11312-1848
Fax +27 11312-1594
sales.sa@igus.de

59 South Korea
igus® Korea Co. Ltd.
Venture-ro 12-42,
Yeonsu-gu
Incheon city, 22011
Phone +82 32 82129-11
Fax +82 32 82129-13
kr-info@igus.net

60 Spain
igus® S.L.
Ctra. Llobatona, 6
Polígono Noi del Sucre
08840 Viladecans – BCN
Phone +34 93 647 39 50
Fax +34 93 647 39 51
igus.es@igus.es

61 Sweden
igus® AB
Berga Allé 1
254 52 Helsingborg
Phone +46 42 329270
Fax +46 42 211585
info@igusab.se

61 Sweden – the-chain
OEM Automatic AB
Box 1011 Dalagatan 4
573 28 Tranås
Phone +46 75 2424100
Fax +46 75 2424159
info@oemautomatic.se

61 Sweden – dry-tech®
Colly Components AB
Raseborgsgatan 9
P.O. Box 76
164 94 Kista
Phone +46 8 7030100
Fax +46 8 7039841
info@me.colly.se

62 Switzerland
igus® Schweiz GmbH
Winkelstr. 5
4622 Egerkingen
Phone +41 62 388 97 97
Fax +41 62 388 97 99
info@igus.ch

63 Taiwan
igus® Taiwan Company Ltd.
5F, No. 35, 24th Road
Taichung Industrial Park
Taichung 40850
Phone +886 4 2358-1000
Fax +886 4 2358-1100
info@igus.com.tw

64 Thailand
igus® Thailand Co., Ltd
1340 Soi Bangkok-Nonthaburi 30,
Bangkok-Nonthaburi Rd.,
Bangsue, Bangsue
Bangkok 10800
Phone +66 (0)2 587 4899
Fax +66 (0)2 587 4898
info@igus.co.th

65 Tunisia
BOUDRANT
53, Avenue de Carthage
1000 Tunis – Tunisia
Phone +216 71340244
Fax +216 71348910
info@boudrant.com.tn

66 Turkey
igus® Turkey
Güzeller Org. San. Bölg.
Galvano Teknik San. Sit.
Cumhuriyet Cad. 2/32
P.K. 41400 Gebze / Kocaeli
Phone +90 262 502 14 08
Fax +90 262 502 14 19
info@igus.com.tr

66 Turkey
HIDREL Hidrolik Elemanlar
Sanayi ve Ticaret A.S.
Percemli Sk. No. 7
Tünel Mevkii
34420 Karaköy / Istanbul
Phone +90 212 2494881
Fax +90 212 2920850
info@hidrel.com.tr

67 UAE + Oman
Unigroup FZE
Plot of Land M6-01
Sharjah Airport Free Zone
P.O. Box 120300
Sharjah - U.A.E.
Phone +971 6 5578386
Fax +971 6 5578387
automation@unigroup.ae

68 United Kingdom
igus®
Caswell Rd
Northampton NN4 7PW
Phone +44 1604 677240
sales@igus.co.uk

69 Ukraine
Hennlich Ukraine LLC (HQ)
Kramatorska Street 15
84100 Slovyansk City,
Donetsky Region
Phone +38 06262 33540
hennlich@hennlich.com.ua

69 Ukraine
Cominpro GmbH
Romena Rollana 12,
Office 100
61058 Kharkov
Phone/Fax +38 057-7174914
Mobile +38 050-4012625
cominpro@gmail.com

70 Uruguay
Larrique Rulemanes SA
Galicia 1204
Montevideo-Uruguay
Phone +598 29021773
Fax +598-29084824
larrique@larrique.com.uy

71 USA
igus® inc.
257 Ferris Avenue
P.O. Box 14349
East Providence
RI 02914
Phone +1 401 4382200
Fax +1 401 4387270
webmaster@igus.com

72 Venezuela
Neumatica Rotonda C.A.
Prolong Av. Michelena
C.C. Atlas Locales B-10 y B-11
Valencia, Edo. Carabobo
Phone +58 241 832.64.64
+58 241 832.32.50
+58 241 838.88.19
Fax +58 241 832.62.83
ventas@neumaticar.com

73 Vietnam
igus® Vietnam Company Ltd
Unit 4, 7th Floor, Standard
Factory B, Tan Thuan Export
Processing Zone
Tan Thuan Street
District 7, HCM City, Vietnam
Phone +84 28 3636 4189
info@igus.vn

74 Cyprus
G.C.V. Spare Parts & Services Ltd (HQ)
Industrial Area Anatoliko
8068 Pafos
Phone +357 26 812444
Fax +357 26 812447
igus@gcv-parts.com

igus®.eu/20h

Place your orders until late. Ordering and deliveries weekdays from 7.00am to 8.00pm, Saturday from 8.00am to 12.00pm. No minimum order quantity, no surcharges. Quick delivery.
www.igus.eu Phone +49-2203 9649-800 Fax -222

igus®.eu/24

Buy online - 24hrs! www.igus.eu

igus®/9001:2015 /16949:2016 /14001:2015

igus® is certified in accordance with ISO 9001:2015 and IATF 16949:2016 in the field of energy supply systems, cables and harnessing, as well as plastic bearings. igus® is certified according to ISO 14001:2015.

igus®/readychain®

Ask for fully harnessed and pre-assembled energy supply systems - immediately increase your cash-flow and profit with readychain®.
www.igus.eu/readychain

igus®/newsletter

Free of charge! Learn more about trends and innovations from the igus® motion plastics® world. Register here: www.igus.eu/newsletter

igus®.eu

igus® GmbH Spicher Straße 1a 51147 Cologne, Germany
Phone: +49 2203 9649-800 Fax +49 2203 9649-222
info@igus.de www.igus.eu

Subject to technical alterations. MAT0072915.20 Issue 04/2023

igus® igus® igus® igus®